SHELL BUILDING
FOR A DOLLAR TREE STORE
N HWY 19 & CR 44
EUSTIS, FL 32726

LOCATION MAP

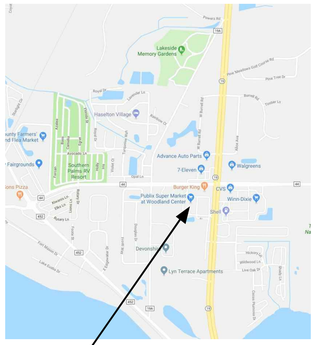

CODE / PROJECT DATA

BUILDING CODE:	2017 FBC
PLUMBING CODE:	2017 FPC
ELECTRICAL CODE:	2014 NATIONAL ELECTRICAL CODE
MECHANICAL CODE:	2017 FMC
FIRE & LIFE SAFETY CODE:	2017 FFPC
ENERGY CODE:	2017 FL ENERGY CC
ACCESSIBILITY:	2014 FBC- ACCESSIBLE
CONSTRUCTION CLASSIFICATION:	**TYPE II-B -UNPROTECTED**
FIRE SPRINKLER SYSTEM:	NO, PER FBC 903.2.7: A FIRE SPRINKLER SYSTEM IS NOT REQUIRED IF TOTAL BUILDING AREA IS LESS THAN 12,000 S.F.

TOTAL GROSS BUILDING AREA = 10,050 S.F.
(ALLOWED AREA FOR TYPE II-B = 12,500 S.F.)
ALLOWED BUILDING HEIGHT = 65 FT.

BUILDING AREAS:

BUILDING TOTAL (GROSS):	**10,050 SQ. FT.**
SALES AREA (NET):	**7,815 SQ. FT.**
STOCKROOM (NET):	**1,411 SQ. FT.**
OFFICE (NET):	**80 SQ. FT.**

OCCUPANCY GROUP: MERCANTILE

OCCUPANCY LOAD:

SALES:	**7,815 S.F. / 30 = 260 OCCUPANTS**
STOCKROOM (ACCESSORY OCCUPANCY S-1):	**1,411 S.F. / 300 = 5 OCCUPANTS**
OFFICE: (BUSINESS)	**80 S.F. / 100 = 1 OCCUPANT**
TOTAL:	**266 OCCUPANTS**

EXIT ANALYSIS

EGRESS WIDTH REQUIRED:	266 OCCUPANTS X 0.2"/OCCUPANT = 53"
EGRESS WIDTH PROVIDED:	DOOR N1 @ 6'-0" = 68" DOOR N2 @ 6'-0" = 68" DOOR N3 @ 3'-0" = 34" **TOTAL WIDTH = 170"**

PLUMBING FIXTURES

266 OCCUPANTS / 2 = 133 OF EACH SEX

FIXTURE:	REQUIRED		PROVIDED	
DRINKING FOUNTAIN (1/1000)	1		2	
	MEN	WOMEN	MEN	WOMEN
WATER CLOSET (1/500)	1	1	1	1
LAVATORY (1/750)	1	1	1	1

WIND DESIGN SPEED:

RISK CATEGORY II = **140 MPH (ULT.)/108 MPH (ASD)**

OWNER & CONSULTANTS

OWNER

BYBLOS DEVELOPMENT, INC
TOM HARB, P.E
7932 WEST SAND LAKE ROAD
SUITE 102
ORLANDO, FLORIDA 32819

ARCHITECT

INTERPLAN LLC
604 COURTLAND ST, SUITE 100
ORLANDO, FL 32804
PHONE: 407-645-5008
ARCHITECT OF RECORD: LOUISE CRAVER
CONTACT: RAFAEL CARBONE

STRUCTURAL ENGINEER

DANSK CONSULTING INC.
1673 LAKE BALDWIN LANE
ORLANDO, FL 32814
PHONE: 407-252-4225
ENGINEER OF RECORD: BJARNE MADSEN

MECHANICAL ENGINEER
PLUMBING ENGINEER
ELECTRICAL ENGINEER

INTERPLAN LLC
604 COURTLAND ST, SUITE 100
ORLANDO, FL 32804
PHONE: 407-645-5008
ENGINEER OF RECORD: STACY HENSON

CONTACTS

GOVERNMENTAL AGENCIES

AGENCY:	CITY OF EUSTIS DEVELOPMENT SERVICES
ADDRESS:	10 N. GROVE ST. EUSTIS, FL 32726
CONTACT:	GUY PRIEST
PHONE:	(352) 483-5462
EMAIL:	priestg@ci.eustis.fl.us

SYMBOLS / LEGEND

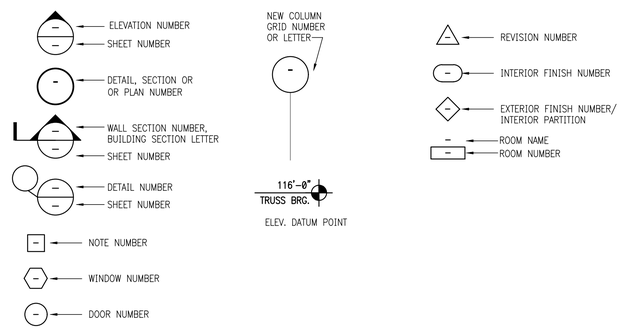

SHEET INDEX

SHT. NO.	DESCRIPTION	SHT. NO.	DESCRIPTION
CS	INDEX, CODE ANALYSIS, LOCATION MAP, LEGEND	S3.2	SECTIONS, DETAILS & SCHEDULES
SD1.0	SITE DETAILS: DUMPSTER ENCLOSURE DETAILS		
			MECHANICAL DRAWINGS
		M0.1	MECHANICAL SPECS NOTES & LEGEND
	ARCHITECTURAL DRAWINGS	M1.0	MECHANICAL FLOOR PLAN
A0.1	LIFE SAFETY PLAN	M2.0	MECHANICAL SCHEDULES
A1.0	FLOOR PLAN	M3.0	MECHANICAL DETAILS
A1.1	REFLECTED CEILING PLAN		**PLUMBING DRAWINGS**
A2.0	EXTERIOR ELEVATIONS	P0.1	PLUMBING NOTES, LEGEND & DETAILS
A2.1	EXTERIOR ELEVATIONS	P1.0	PLUMBING FLOOR PLAN
A3.0	BUILDING & WALL SECTIONS	P1.1	PLUMBING RISERS
A3.1	WALL SECTIONS & DETAILS		**ELECTRICAL DRAWINGS**
A4.0	ENLARGED OFFICE ROOM & DETAILS	E0.0	ELECTRICAL NOTES & SPECIFICATIONS
A5.0	ENLARGED RESTROOM PLAN & DETAILS	E0.1	NOT USED
A6.0	DOOR SCHEDULE, DETAILS & NOTES	E1.0	ELECTRICAL SITE PLAN
	STRUCTURAL DRAWINGS	E2.0	ELECTRICAL LIGHTING PLAN
S0.1	STRUCTURAL NOTES	E3.0	ELECTRICAL POWER PLAN
S1.1	FOUNDATION PLAN	E4.0	ELECTRICAL DETAILS
S2.1	ROOF FRAMING PLAN	E5.0	E. PANEL SCHEDULES AND RISERS
S3.1	SECTIONS, DETAILS & SCHEDULES	E6.0	NOT USED

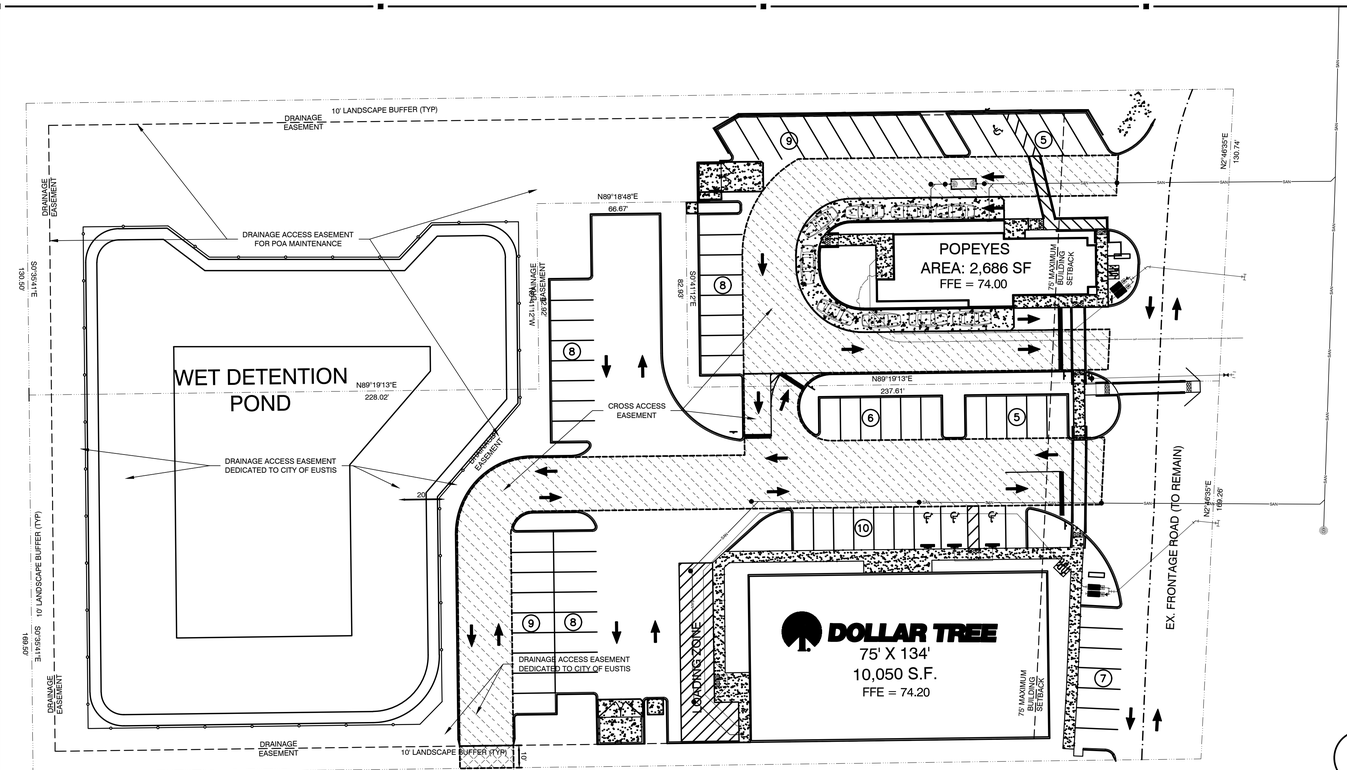

SITE PLAN NTS

NORTH

REVISION ISSUE LOG

REV #	ISSUE DATE	DESCRIPTION	AFFECTED SHEETS	REMARKS	BY

CONTRACTOR GENERAL NOTES

A. IT IS THE CONTRACTOR'S RESPONSIBILITY TO REVIEW ALL DRAWINGS AND SPECIFICATIONS, INCLUDING BUT NOT LIMITED TO ARCHITECTURAL, CIVIL, STRUCTURAL, MECHANICAL, PLUMBING AND ELECTRICAL, PRIOR TO SUBMITTING A BID. REPORT ANY DISCREPANCIES TO ARCHITECT OR ENGINEER PRIOR TO BID.
B. THESE DOCUMENTS ARE BASED UPON MEASURED DRAWINGS AND OTHER INFORMATION PROVIDED BY THE OWNER AS WELL AS NON-INVASIVE SITE VISITS. THE MEASURED DRAWINGS INCLUDE ONLY THOSE ELEMENTS AND SYSTEMS EXPOSED TO VIEW AND HAVE NOT BEEN FIELD VERIFIED. THE CONSTRUCTION DOCUMENTS HAVE BEEN PRODUCED WITHOUT THE BENEFIT OF KNOWLEDGE OF THE EXACT EXISTING STRUCTURAL, PLUMBING, MECHANICAL AND ELECTRICAL SYSTEMS.
C. IT IS THE CONTRACTOR'S RESPONSIBILITY TO FIELD VERIFY ALL EXISTING BUILDING ELEMENTS AND SYSTEMS, FAMILIARIZE THEMSELVES WITH EXISTING CONDITIONS AND SATISFY THEMSELVES AS TO THE NATURE AND SCOPE OF THE WORK, REVIEW THE CONTRACT DOCUMENTS AND NOTIFY THE ARCHITECT OF ANY CONFLICTS AND/OR DISCREPANCIES PRIOR TO BID. THE SUBMISSION OF A BID WILL BE EVIDENCE THAT SUCH AN EXAMINATION HAS BEEN MADE. LATER CLAIMS FOR LABOR, EQUIPMENT OR MATERIALS REQUIRE, OR FOR ANY DIFFICULTIES ENCOUNTERED WHICH COULD HAVE BEEN FORESEEN HAD AN EXAMINATION BEEN MADE, WILL NOT BE ALLOWED.
D. IT IS THE RESPONSIBILITY OF THE CONTRACTOR TO NOTIFY THE ARCHITECT OF ANY DISCREPANCIES ENCOUNTERED ON THE PLANS OR IN EXISTING SITE CONDITIONS PRIOR TO SUBMISSION OF BID.
E. CONTRACTOR, DURING PRE-BID SITE VISIT, SHALL TAKE NOTICE OF ANY VISUALLY APPARENT CODE VIOLATIONS AND ALLOW IN HIS/HER BID FOR CORRECTING SUCH VIOLATIONS.
F. CONTRACTORS ARE CAUTIONED TO COORDINATE ITEMS IN THEIR SCOPE OF WORK WITH OTHER TRADES.
G. THE CONTRACTOR SHALL NOTIFY THE ARCHITECT OF ANY CONFLICTS AND/OR DISCREPANCIES DISCOVERED DURING DEMOLITION AND CONSTRUCTION PHASES OF THE PROJECT.
H. THESE NOTES APPLY TO ALL SHEETS.

NOTES:

1. MONUMENT SIGN, AWNINGS & CANOPIES, SIGNAGE AND DUMPSTER ENCLOSURE WILL REQUIRE SEPARATED PERMITS.

FL PRODUCT APPROVAL LIST

CATEGORY	MANUFACTURER	APPROVAL#	EXPIRATION
STOREFRONT	KAWNEER TRIFAB VG 451T	FL 7237-R8	12-31-20
DOORS-STRFRNT	KAWNEER TRIFAB VG 451T	FL 7237-R8	12-31-20
DOORS-STEEL	REPUBLIC DL416 SERIES-SINGLE	FL 15869-R3	
DOORS-STEEL	REPUBLIC DL416 SERIES-DOUBLE	FL 15869-R3	
EIFS/STUCCO	STO CORP.	FL 20110-R1	12-31-19

METAL BUILDING NOTES

1. METAL BUILDING DETAILS ARE PROVIDED TO SHOW DESIGN INTENT ONLY. PRE-ENGINEERED METAL BUILDING (PEMB) SHALL DETERMINED FINAL DETAILS TO PROVIDE INTENT INDICATED.
2. REFER TO THE PEMB DOCUMENTS AND SHOP DRAWINGS FOR PROJECT SPECIFIC DETAILS.
3. G.C SHALL COORDINATE PROJECT SPECIFIC METAL BUILDING DETAILS WITH OTHER ELEMENTS OF THE WORK.
4. THE ARCHITECTURAL PLANS ASSUMED AN 8" DEPTH FOR THE PEMB STRUCTURE WITH 3 5/8" METAL STUD FURRING AT THE INTERIOR WALLS. THERE SHALL BE NO PROJECTIONS OF COLUMNS AT THE SALES FLOOR WALLS. WHERE NECESSARY, THE LOCATION AND/OR SIZE OF THE INTERIOR METAL STUDS MUST BE ADJUSTED IN ORDER TO CONCEAL THE COLUMNS. aLSO, DEPENDING ON THE DEPTH OF THE GIRTS, THE SIZE OF THE METAL STUDS MAY BE REQUIRED TO BE REDUCED.

INTERPLAN LLC
ARCHITECTURE
ENGINEERING
INTERIOR DESIGN
PROJECT MANAGEMENT

AA 003420
CA 8660

604 COURTLAND STREET
SUITE 100
ORLANDO, FLORIDA 32804
PH 407.645.5008
FX 407.629.9124

SEAL:

THIS DOCUMENT IS NOT FOR REGULATORY APPROVAL, PERMITTING, OR CONSTRUCTION.

NO DATE REMARKS
REVISIONS

SHELL BUILDING for DOLLAR TREE

N HWY 19 & CR 44
EUSTIS, FL

PROJECT NO: 2018.0328
DATE: 08-27-2018

CS
COVER SHEET

CHECKED: RC DRAWN: MS

COPYRIGHT © 2018 INTERPLAN LLC FILE:\SERVER\SYSFOLDERS\P-R\C-D\CHRISHARRIS\RECTANGULAR\DOCUMENTS\DOLLAR TREE\CRANDALL SITE\DWG\CRANDALL SITE DWG\CRANDALL SITE - SD1.DWG

MASONRY WALL SCHEDULE		
MARK	THICKNESS	REINFORCING
MW-1	8" CMU	#5 AT 32" O.C.

MASONRY WALL NOTES:
1. WALL SEGMENTS SHALL BE REINFORCED WITH 9 GA. GALVANIZED LATERAL REINFORCING @ 16" O.C. HORIZ. EXTEND REINFORCING 6" INTO POURED ELEMENTS AND AROUND ENCASED STEEL.
2. ADJACENT TO ANY EXTERIOR/INTERIOR WALL OPENING, PLACE 1 #6 VERTICAL IN CELL GROUTED SOLID, FULL HEIGHT.
3. ALL MASONRY REINFORCED CELLS SHALL BE FILLED WITH 3000 PSI GROUT MIX.

FOOTING SCHEDULE		
MARK	SIZE	REINFORCING
MF36.18	3'-0"W X 18"D X CONT.	(4) #5 CONT. BOTTOM EQUALLY SPACED
T.E.	1'-0"W X 16"D X CONT.	(1) #5 CONT. BOTTOM

CODE DATA:

FLORIDA BUILDING CODE 2017 EDITION,
WIND SPEED: 140 (ULT) / 108(ASD) MPH
EXPOSURE C, +/- 0.0 INTERNAL PRESSURE COEFFICIENT,
IMPORTANCE FACTOR: 1.0
RISK CATEGORY: II
DESIGNED WIND PRESSURE: 35PSF
THE STRUCTURE IS DESIGNED AS OPEN.

FOUNDATION NOTES:

1. ELEV. ±0'-0" IS REFERENCE ONLY. SEE CIVIL FOR TRUE NGVD ELEVATION.
2. C.J. INDICATES CONTROL JOINT SEE STRUCTURAL DETAILS.
3. T.E. INDICATES THICKENED EDGE SEE SCHEDULE.
4. VERIFY SLOPES AND STEPS WITH ARCH'L PRIOR TO CONSTRUCTION.
5. ALL MASONRY WALLS ARE MW-1 U.N.O., SEE SCHEDULE ON THIS SHEET.
6. TOP OF FOOTING ELEVATION = -1'-4" BELOW GRADE. SEE SCHEDULE ON THIS SHEET.
7. FLOOR CONSTRUCTION: 6" THICK CONCRETE SLAB ON GRADE W/ #4 AT 16" O.C. E.W. MID-DEPTH, AND 8" THICK CONCRETE SLAB REINF. W/ #4 AT 16" O.C. E.W. MID-DEPTH.
8. FOOTING EXCAVATIONS SHALL BE FREE OF WATER BEFORE PLACING CONCRETE.

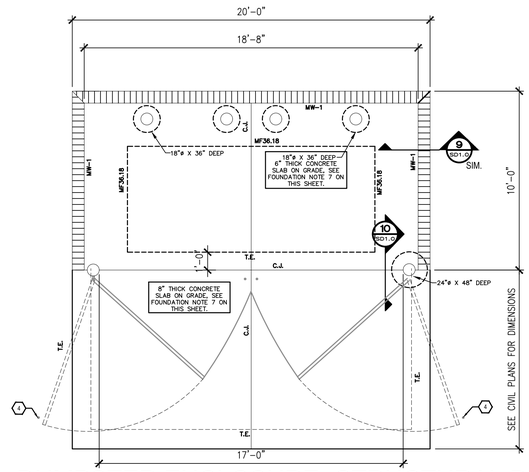

8 SD1.0 DUMPSTER ENCLOSURE -STRUCTURAL PLAN
SCALE: 3/8" = 1'-0"

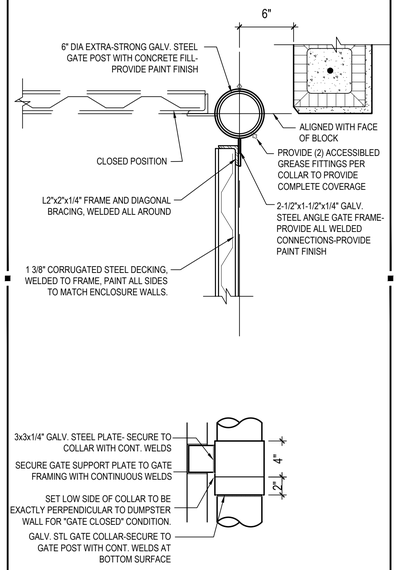

5 SD1.0 GATE POST & HINGE DETAIL
SCALE: 1 1/2" = 1'-0"

SINGLE DUMPSTER ENCLOSURE:

SINGLE DUMPSTER ENCLOSURE DIMENSIONS =
10'-0" DEEP X 13'-4" WIDE (OUTSIDE DIMENSIONS)
WITH TWO SWING GATES

KEY NOTES:

1. BOLLARD: 6" DIA. X 7'-0" LONG CONCRETE FILLED SCH 40 GALVANIZED STEEL PIPE, TOP OF BOLLARD AT 48" ABOVE SLAB; PAINT TO MATCH GATE POSTS.
2. ALL GATES TO BE FITTED WITH $\frac{1}{2}$" DIA x 6" LONG CANE BOLT TO HOLD GATES IN PLACE WHEN OPENED AND WHEN CLOSED. PAINT AS INDICATED IN ELEVATIONS.
3. 6" CONCRETE FILLED STRUCTURAL POST. EMBED INTO CONCRETE FOOTING, REFER TO STRUCTURAL DETAIL; PAINT AS INDICATED.
4. DRILLED HOLES IN CONCRETE SLAB FOR CANE BOLTS.
5. 1 3/8" CORRUGATED STEEL DECKING, WELDED TO FRAME, PAINT ALL SIDES TO MATCH ENCLOSURE WALLS.

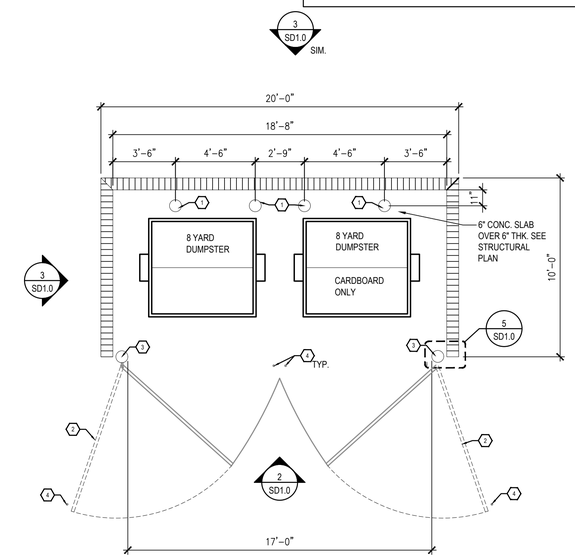

1 SD1.0 DUMPSTER ENCLOSURE PLAN
SCALE: 1/4" = 1'-0"

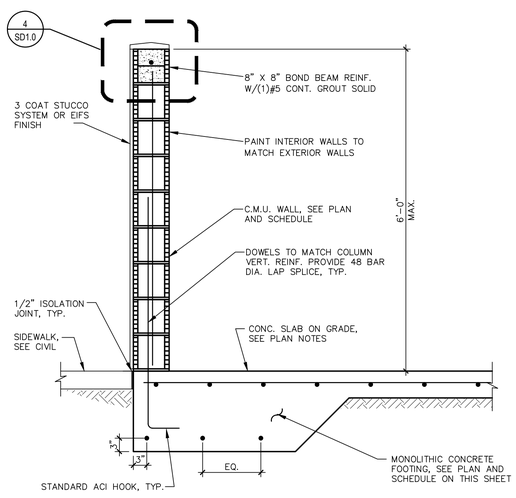

9 SD1.0 WALL SECTION
SCALE: 3/4" = 1'-0"

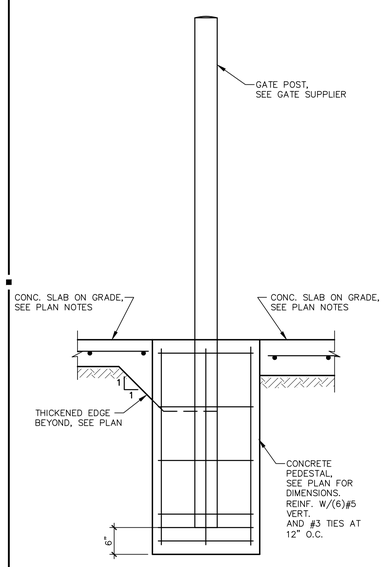

10 SD1.0 GATE POST DETAIL
SCALE: 3/4" = 1'-0"

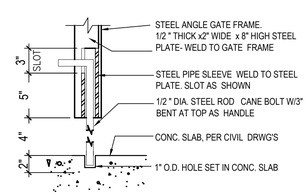

6 SD1.0 CANE BOLT DETAIL
SCALE: 1 1/2" = 1'-0"

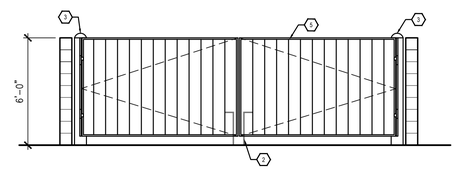

2 SD1.0 DUMPSTER ENCLOSURE ELEVATION
SCALE: 1/4" = 1'-0"

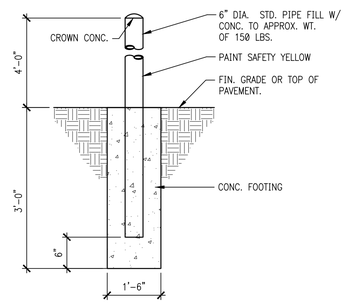

7 SD1.0 BOLLARD DETAIL
SCALE: NTS

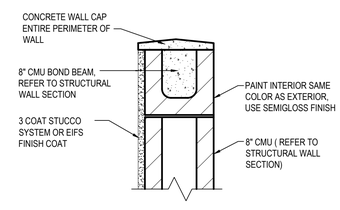

4 SD1.0 WALL SECTION DETAIL
SCALE: 1 1/2" = 1'-0"

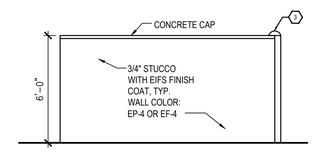

3 SD1.0 DUMPSTER ELEVATION
SCALE: 1/4" = 1'-0"

INTERPLAN PLLC
ARCHITECTURE
ENGINEERING
INTERIOR DESIGN
PROJECT MANAGEMENT

AA 003420
CA 8660

604 COURTLAND STREET
SUITE 100
ORLANDO, FLORIDA 32804
PH 407.645.5008
FX 407.629.9124

SEAL:

THIS DOCUMENT IS NOT FOR REGULATORY APPROVAL, PERMITTING, OR CONSTRUCTION.

NO	DATE	REMARKS

REVISIONS

SHELL BUILDING for DOLLAR TREE

N HWY 19 & CR 44
EUSTIS, FL

PROJECT NO: 2018.0328
DATE: 08-27-2018

SD-1

DUMPSTER ENCLOSURE DETAILS

CHECKED: RC DRAWN: MS

COPYRIGHT © 2018 INTERPLAN PLLC

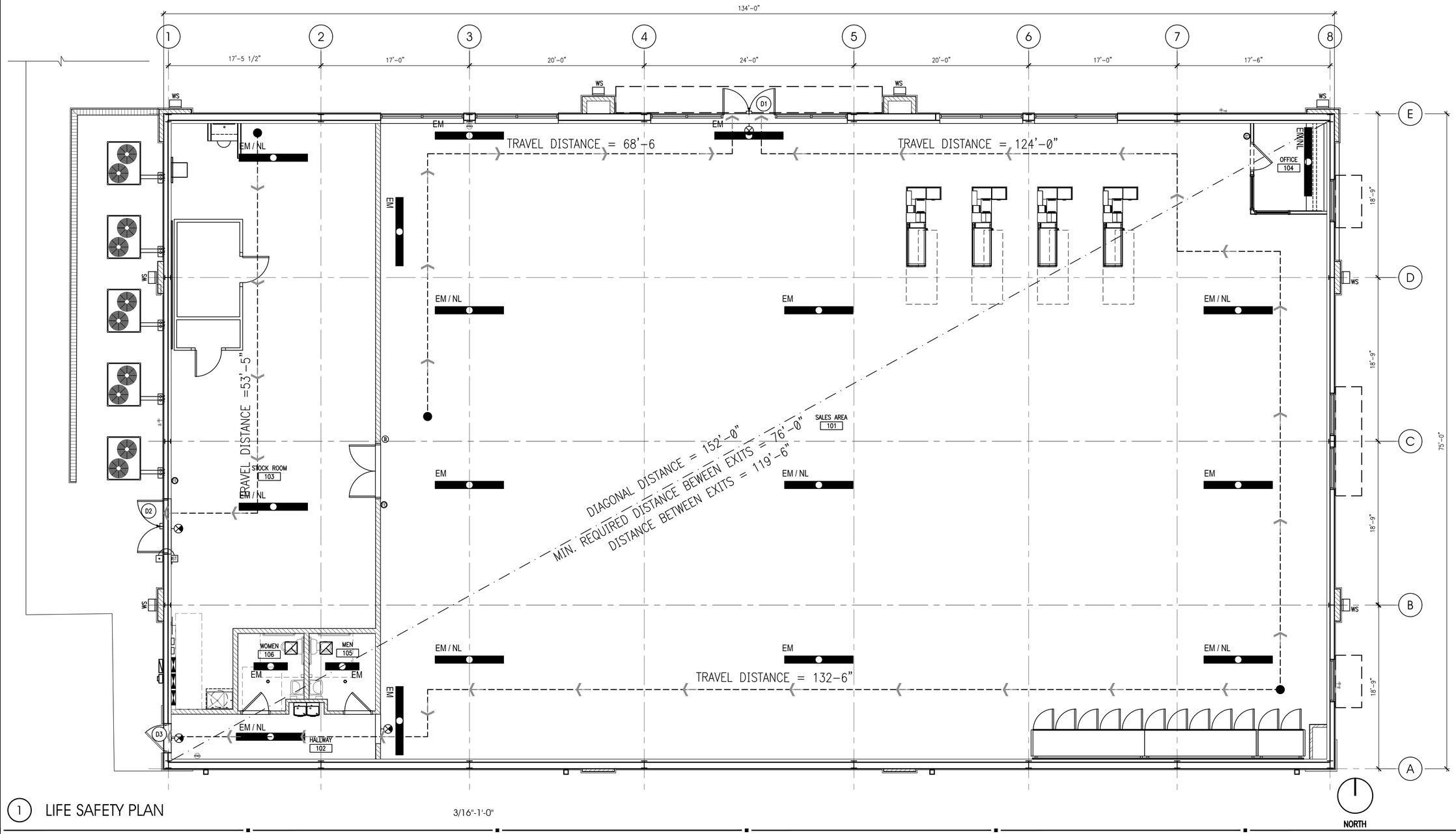

1 LIFE SAFETY PLAN

3/16"-1'-0"

CODE / PROJECT DATA

CONSTRUCTION CLASSIFICATION:
TYPE II–B –UNPROTECTED, UNSPRINKLERED

OCCUPANCY GROUP:
MERCANTILE CLASS B

BUILDING AREAS:

BUILDING TOTAL (GROSS):	**10,050 SQ. FT.**
SALES AREA (NET):	**7,815 SQ. FT.**
STOCKROOM (NET):	**1,411 SQ. FT.**

EXIT ANALYSIS:

EGRESS WIDTH REQUIRED:	266 OCCUPANTS X 0.2"/OCCUPANT = 53"
EGRESS WIDTH PROVIDED:	DOOR N1 @ 6'–0" = 68"
	DOOR N2 @ 6'–0" = 68"
	DOOR N3 @ 3'–0" = 34"
	TOTAL WIDTH = 170"

TRAVEL DISTANCE:
MAXIMUM TRAVEL DISTANCE SHALL BE 150'–0". ACTUAL TRAVEL DISTANCE AS SHOWN.

FIRE RESISTANCE NOTES:

1. FIRE SEPARATION OF ACCESSORY SPACES LIKE THE STORAGE(S–1) FROM MERCANTILE IS NOT REQUIRED PER F.B.C. SECTION 508.2.4 & TABLE 508.2. ALSO PER NFPA 101 L.S.C 6.1.14.1.3.
2. AUTOMATIC FIRE SPRINKLER SYSTEM IS NOT REQUIRED PER F.B.C. SECTION 903.2.7.
3. A FIRE ALARM SYSTEM IS NOT REQUIRED PER F.B.C. SECTION 907.2.7.

GENERAL NOTES:

1. NO GONDOLA UNITS, FIXTURES, OR PALLETS SHALL BE OVER 8'–0" AFF.
2. FIXTURE PLAN IS "FOR REFERENCE ONLY." CONTRACTOR SHALL CONTACT DOLLAR TREE FOR FINAL APPROVED LAYOUT.
3. CHECKOUTS ARE NOT ATTACHED TO FLOOR.

LEGEND:

	TRAVEL DISTANCE
EXIT	EXIT SIGN
EM	EMERGENCY LIGHT (EM/NL= EMERGENCY & NIGHT LIGHT)
F.E.	FIRE EXTINGUISHER

INTERPLAN PLLC
ARCHITECTURE
ENGINEERING
INTERIOR DESIGN
PROJECT MANAGEMENT

AA 003420
CA 8660

604 COURTLAND STREET
SUITE 100
ORLANDO, FLORIDA 32804
PH 407.645.5008
FX 407.629.9124

SEAL:

THIS DOCUMENT IS NOT FOR REGULATORY APPROVAL, PERMITTING, OR CONSTRUCTION.

NO	DATE	REMARKS

REVISIONS

SHELL BUILDING for DOLLAR TREE

N HWY 19 & CR 44
EUSTIS, FL

PROJECT NO: 2018.0328
DATE: 08-27-2018

A0.1

LIFE SAFETY PLAN

CHECKED: RC DRAWN: MS

COPYRIGHT © 2018 INTERPLAN PLLC

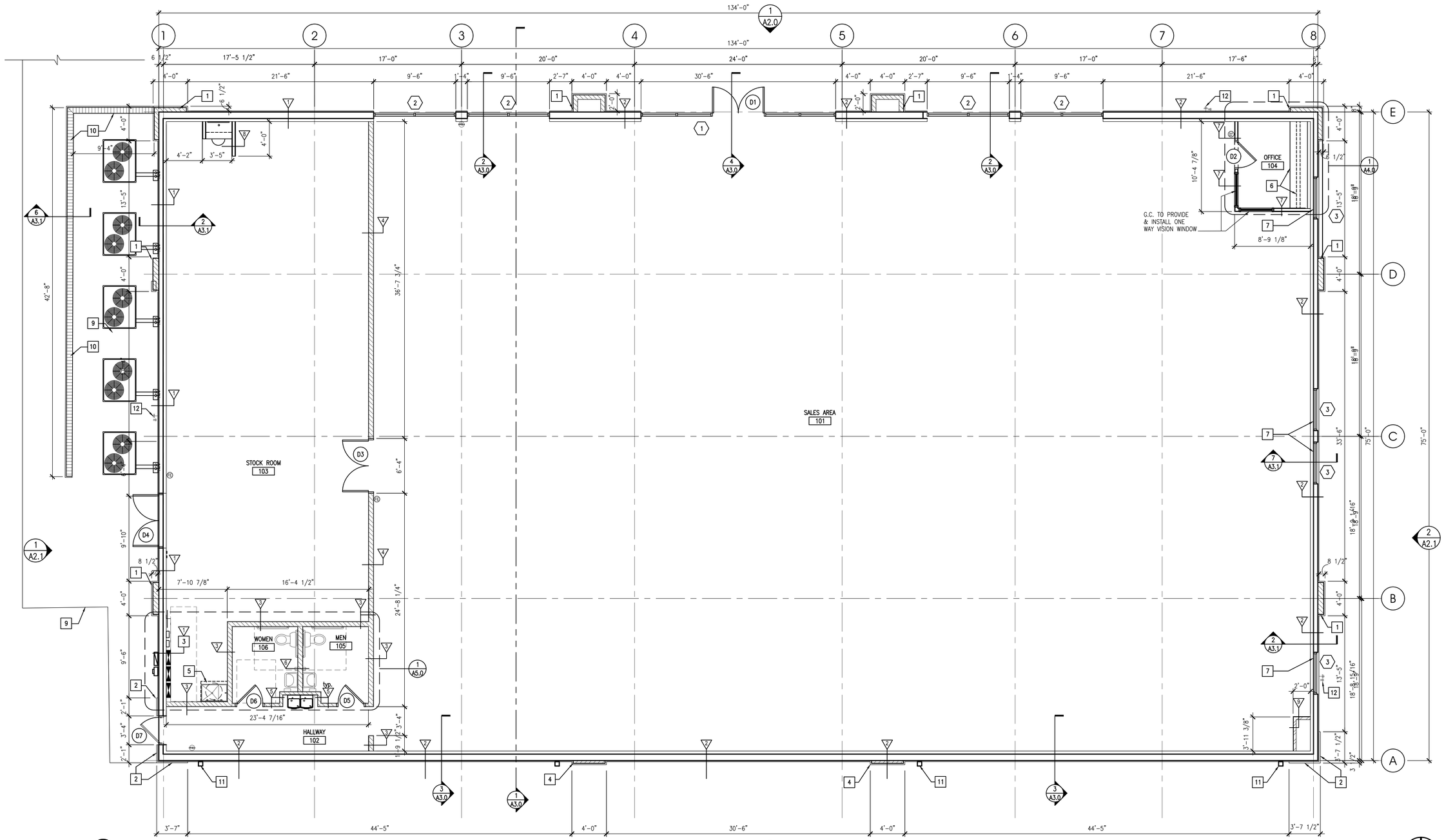

1 FLOOR PLAN

3/16"-1'-0"

NORTH

WALL CONSTRUCTION TYPES:

1. EXTERIOR PEMB WALL WITH 2 1/2" x20 GA METAL FURRING @ 16" O,C, AND 5/8" GYP. BD UP TO 8'-0" A.F.F. : REFER TO PEMB SHOP DRAWINGS FOR CONSTRUCTION. PATCH AND REPAIR WALL AS REQUIRED. SEE FINISH SCHEDULE.
2. EXTERIOR PEMB WALL WITH 3 5/8"x 20 GA METAL STUD FURRING @ 16" O.C. SECURE TO UNDERSIDE OF BLDG STRUCTURE. 5/8" GWB. TO 6" ABOVE CEILING HEIGHT. FINISH PER FINISH SCHEDULE.
3. PARTITION WALL: 6" (20 GA) METAL STUDS @ 16" OC WITH ONE LAYER 5/8" GWB EACH SIDE TO ROOF DECK ON SALES AREA SIDE (or STOCKROOM SIDE), AND TO 6" ABOVE CEILING ON OTHER SIDE. FINISH PER FINISH SCHEDULE.
4. INTERIOR PARTITION WALL: 6" (20 GA) METAL STUDS @ 16" OC WITH ONE LAYER 5/8" GWB EACH SIDE TO ROOF DECK. FINISH PER FINISH SCHEDULE.
5. PARTITION WALL: 3⅝" x20 GA METAL STUD @ 16" O.C. AND 5/8" GWB EACH SIDE TO 6" ABOVE CEILING. FINISH PER FINISH SCHEDULE,
6. PLUMBING WALL: 6" x20 GA METAL STUD @ 16" O.C. AND 5/8" WR GWB EACH SIDE TO 6" ABOVE CEILING. FINISH PER FINISH SCHEDULE,
7. PARTITION WALL AT OFFICE: 3 5/8" x20 GA METAL STUDS @ 24" OC WITH ONE LAYER 5/8" GWB EACH SIDE. TOP OF WALL @ 8'-0" AFF. SEE FINISH SCHEDULE.
8. LOW WALL: 3 5/8" x20 GA METAL STUDS WITH 3/4" MDO PLYWOOD EACH SIDE. TOP OF WALL @ 5'-0" A.F.F. PROVIDE 1X WOOD CAP-READY FOR FINISH.
9. PARTITION WALL: 3 5/8" x20 GA METAL STUDS @ 24" OC WITH ONE LAYER 5/8" GWB ON SALES AREA SIDE TO 6" ABOVE CEILING. SEE FIINISH SCHEDULE.

ROOM FINISH SCHEDULE

No.	ROOM NAME	FLOOR: EXPOSED SMOOTH CONCRETE	FLOOR: 12"X12"VCT COLOR: BEIGE	BASE: 6" VINYL COVE BASE, COLOR: BLACK	WALLS: GYPSUM BD., MUDDED, SANDED	WALLS: FRP- WHITE, FULL HEIGHT	CEILINGS MATERIAL: ACOUST. CLG. TILE (ACT-1)	CEILINGS MATERIAL: PTD. GYPSUM BD. (GYP-1)	CEILINGS MATERIAL: OPEN TO STRUCTURE	CEILINGS MATERIAL: OPEN TO SALES AREA	HEIGHT	
101	SALES AREA	●			●		●				12'-0"	1,2
102	HALLWAY	●			●		●				10'-0"	1,2,4
103	STOCKROOM	●			●				●		NONE	1,2
104	OFFICE	●								●	12'-0"	1,2
105	MEN		●	●	●	●		●			8'-0"	1,3
106	WOMEN		●	●	●	●		●			8'-0"	1,3

ROOM FINISH NOTES

1. FINISHED WALL IS DEFINED AS CAULKED, TAPED, MUDDED AND SANDED SMOOTH AND READY FOR TENANT'S FINISH
2. SEALED CONCRETE SLAB: PROVIDE A LEVEL & SMOOTH CONCRETE SLAB, FREE OF LEVELING PRODUCTS WITH NOT MORE THAN 1/4" VARIATION PER 10', AND READY FOR TENANT'S FINISH
3. PROVIDE WATER RESISTIVE GYPSUM BD. PAINT CEILING WITH SEMI-GLOSS PAINT, COLOR: WHITE. TYPE "X" WATER RESISTIVE GYP. BD WHERE NEEDED IN RESTROOM.
4. INSTALL FRP AT THE WALLS SURROUNDING THE DRINKING FOUNTAIN, FROM 4" TO 4'-0" AFF.

WALL LEGEND:

- INTERIOR WALL, SEE WALL TYPES
- PARTIAL HEIGHT WALL

KEY NOTES

1. FAUX PILASTERS: FURR-OUT WALL WITH 6"x 20 GA METAL STUD FURRING @ 16" O.C. & SECURE TO BLDG STRUCTURE. INSTALL 5/8" DENSGLASS GOLD SHEATHING AND 1 1/2" EIFS. FINISH PER EXTERIOR ELEVATIONS.
2. FAUX PILASTERS: FURR-OUT PILASTER WITH ONE OR TWO MORE LAYERS OF RIGID INSULATION TO ACHIEVE THE SPECIFIED EIFS DEPTH. FINISH PER EXTERIOR ELEVATIONS.
3. USE 6" METAL STUD FURRING AT ELECTRICAL PANELS, PROVIDE 5/8" GYP. BD. UP TO 8'-0" A.F.F.
4. FAUX PILASTERS: FURR-OUT WALL WITH 3 5/8"x 20 GA METAL STUD FURRING @ 16" O.C. & SECURE TO BLDG STRUCTURE. INSTALL 5/8" DENSGLASS GOLD SHEATHING AND 1 1/2" EIFS. FINISH PER EXTERIOR ELEVATIONS.
5. MOP SINK AND WATER HEATER ON A WALL MOUNTED SHELL. SEE PLUMBING DRAWINGS.
6. OFFICE COUNTER: PREFORMED COUNTER TOP AND 4" BACKSPLASH 24" DEEP WITH HIGH PREASSURE WHITE PLASTIC LAMINATE FINISH. MOUNTED AT 30" AFF. PROVIDED AND INSTALLED BY G.C.
7. WINDOW OPENING TO BE COVERED WITH GYPSUM BD. ON METAL FRAMING. APPLY BLACK FILM TO INSIDE OF WINDOW GLASS BEFORE COVERING OPENING.
8. ~~FURR OUT STEEL COLUMNS WITH 3 5/8" METAL STUDS AND 5/8" GYPSUM BD., TYP. ALL SIDES.~~
9. 4" THICK CONCRETE SLAB OUTSIDE DOORS AND FOR HVAC EQUIPMENT. REFER TO CIVIL DRAWINGS FOR CONTINUATION
10. 4'-0" HIGH x 8" CMU WALL TO SCREEN HVAC EQUIPMENT. SEE ELEVATIONS FOR FINISHES.
11. 4"X4" DOWNSPOUT. SEE ELEVATIONS & CIVIL DRAWINGS FOR CONTINUATION.
12. HOSE BIB. SEE PLUMBING.

INTERPLAN PLLC

ARCHITECTURE
ENGINEERING
INTERIOR DESIGN
PROJECT MANAGEMENT

AA 003420
CA 8660

604 COURTLAND STREET
SUITE 100
ORLANDO, FLORIDA 32804
PH 407.645.5008
FX 407.629.9124

SEAL:

THIS DOCUMENT IS NOT FOR REGULATORY APPROVAL, PERMITTING, OR CONSTRUCTION.

NO	DATE	REMARKS

REVISIONS

SHELL BUILDING for DOLLAR TREE

N HWY 19 & CR 44
EUSTIS, FL

PROJECT NO: 2018.0328
DATE: 08-27-2018

A1.0
FLOOR PLAN

CHECKED: RC DRAWN: MS

COPYRIGHT © 2018 INTERPLAN PLLC. RESTRICTED DISTRIBUTION OR REPRODUCTION OF THIS DRAWING WITHOUT WRITTEN PERMISSION IS PROHIBITED.

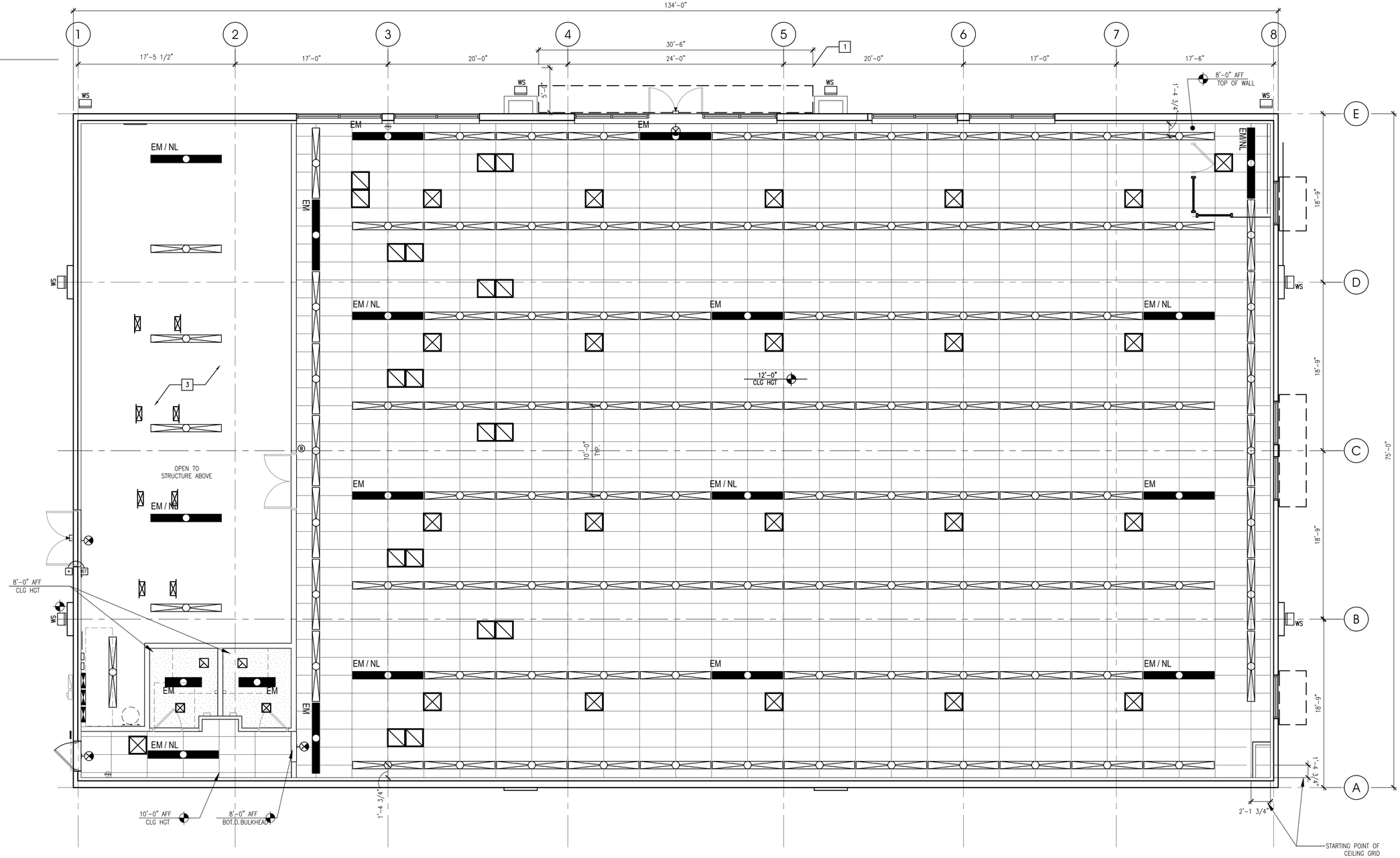

1 REFLECTED CEILING PLAN

3/16"-1'-0"

NORTH

REFLECTED CEILING LEGEND

- 2'-0"X4'-0" ACOUSTICAL CEILING TILE AND GRID- SEE FINISH
- GWB – PAINT WHITE UNLESS OTHERWISE NOTED.
- NL — 8'-0" STRIP LED LIGHT FIXTURE WITH LAMPS ON NIGHT LIGHT CIRCUIT. SURFACE MOUNT TO GWB AND ACT CEILING.
- 8'-0" STRIP LED LIGHT FIXTURE. SURFACE MOUNT TO GWB AND ACT CEILING.
- EM — 8'-0" STRIP LED LIGHT FIXTURE WITH LAMPS ON EMERGENCY LIGHT CIRCUIT WITH BATTERY PACK. SURFACE MOUNT TO GWB AND ACT CEILING. FOR FIXTURES WITH 4 LAMPS, THE EMERGENCY BATTERY PACK WILL ONLY OPERATE 2 OF THE LAMPS.
- NL — 4'-0" STRIP LED LIGHT FIXTURE WITH LAMPS ON NIGHT LIGHT CIRCUIT. SURFACE MOUNT TO TO GWB AND ACT CEILING.
- EM — 4'-0" STRIP LED LIGHT FIXTURE WITH LAMPS ON EMERGENCY LIGHT CIRCUIT WITH BATTERY PACK. SURFACE MOUNT TO TO GWB AND ACT CEILING.
- 4'-0" STRIP LED LIGHT FIXTURE. SURFACE MOUNT TO ACT AND GWB CEILING.
- WS — WALL SCONCE FIXTURE
- EXIT LIGHT
- CEILING HEIGHT ABOVE FINISH FLOOR
- VENTILATION FAN
- DIFFUSER
- RETURN

KEY NOTES

1. PRE-MANUFACTORED CANOPY – PROVIDED BY TENANT. PERMITTED AND INSTALLED BY TENANT'S SIGN/CANOPY CONTRACTOR.
2. PRE-MANUFACTORES CANOPY – PROVIDED BY LANDLORD. PERMITTED AND INSTALLED BY LANDLORD'S CANOPY CONTRACTOR.
3. LIGHTING TO BE MOUNTED AT 10'-0" AFF TO BOTTOM OF FIXTURE, AT OPENED STRUCTURE AREAS.

INTERPLAN PLLC

ARCHITECTURE
ENGINEERING
INTERIOR DESIGN
PROJECT MANAGEMENT

AA 003420
CA 8660

604 COURTLAND STREET
SUITE 100
ORLANDO, FLORIDA 32804
PH 407.645.5008
FX 407.629.9124

SEAL:

THIS DOCUMENT IS NOT FOR REGULATORY APPROVAL, PERMITTING, OR CONSTRUCTION.

NO DATE REMARKS

REVISIONS

SHELL BUILDING for DOLLAR TREE

N HWY 19 & CR 44
EUSTIS, FL

PROJECT NO: 2018.0328
DATE: 08-27-2018

A1.1

REFLECTED CEILING PLAN

CHECKED: RC DRAWN: MS

COPYRIGHT © 2018 INTERPLAN PLLC. RESERVED. DO NOT REPRODUCE OR CHANGE WITHOUT WRITTEN PERMISSION. ALL DRAWINGS, SPECIFICATIONS, SUGGESTIONS, IDEAS, DESIGNS AND PLANS ARE, AND REMAIN THE PROPERTY OF INTERPLAN PLLC.

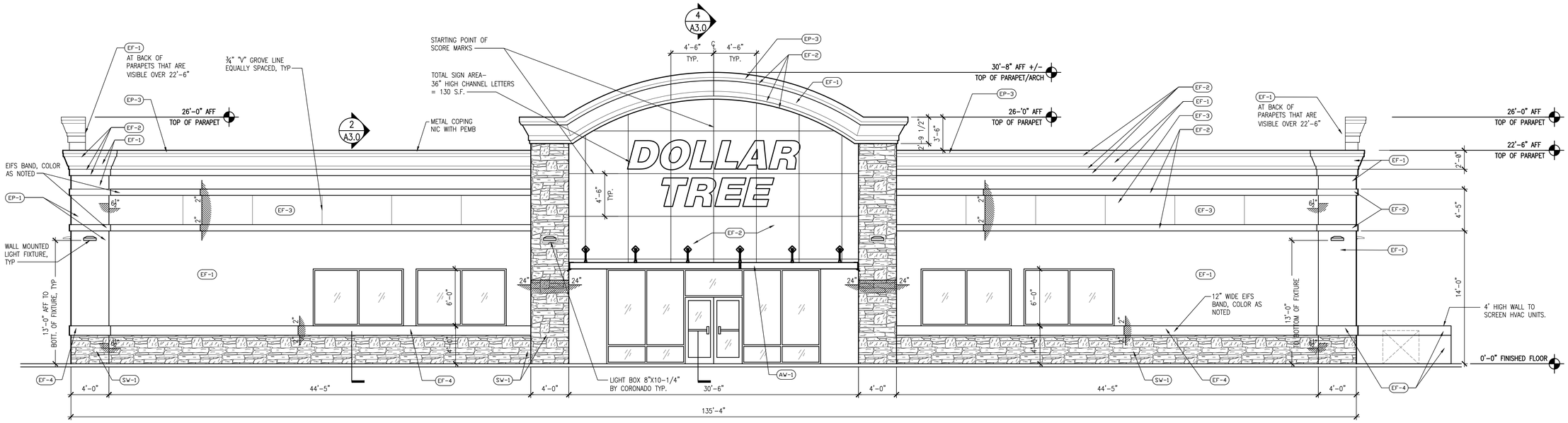

1 FRONT ELEVATION-NORTH- PRIMARY FACADE

3/16"-1'-0"

NOTES:
SIGNAGE AND AWNINGS TO BE PERMITTED SEPARATELY BY SIGN COMPANY/CONTRACTOR.

SIGNAGE AND AWNINGS TO BE PROVIDED, PERMITTED AND INSTALLED BY SIGN COMPANY.

EXTERIOR FINISH LEGEND:

TAG	MATERIAL/ MANUF	DESCRIPTION	COLOR
EF-1	EIFS MANUFACTURER: STO	EXTERIOR INSULATED STUCCO SYSTEM/ FIELD	NA10-0052 SANDSTONE #93860
EF-2	EIFS MANUFACTURER: STO	EXTERIOR INSULATED STUCCO SYSTEM/ TRIM- ACCENT BANDS	NA10-0053 SMOKED PUTTY #93240
EF-3	EIFS MANUFACTURER: STO	EXTERIOR INSULATED STUCCO SYSTEM / ACCENT BAND	NA10-0054 OR TO MATCH SW "ENVY"
EF-4	EIFS MANUFACTURER: STO	EXTERIOR INSULATED STUCCO SYSTEM / WAINSCOT	NA10-0055 TO MATCH SW "VIRTUAL TAUPE" SW7039
EP-1	EXTERIOR PAINT, SHERWIN WILLIAMS	LOCATION: MAIN BODY, FIELD	SW "BALANCED BEIGE" SW7037
EP-2	EXTERIOR PAINT, SHERWIN WILLIAMS	LOCATION: TRIM, ACCENT BAND	SW "AESTHETIC WHITE" SW7035
EP-3	EXTERIOR PAINT, SHERWIN WILLIAMS	LOCATION: ACCENT, PARAPET METAL CAP	ENVY GREEN
EP-4	EXTERIOR PAINT, SHERWIN WILLIAMS	LOCATION: WAINSCOT	SW "VIRTUAL TAUPE" SW7039
AW-1	METAL CANOPY, MAPES CANOPIES	ALUMINUM CANOPY	TO MATCH SW PAINT "ENVY GREEN"
SW-1	MANUF: STONE VENEER, CORONADO STONE	OLD COUNTRY LEDGESTONE GROUT: "LIGHT SMOKE" BY CUSTOM BUILDING PRODUCTS	DAKOTA BROWN (GROUTED)

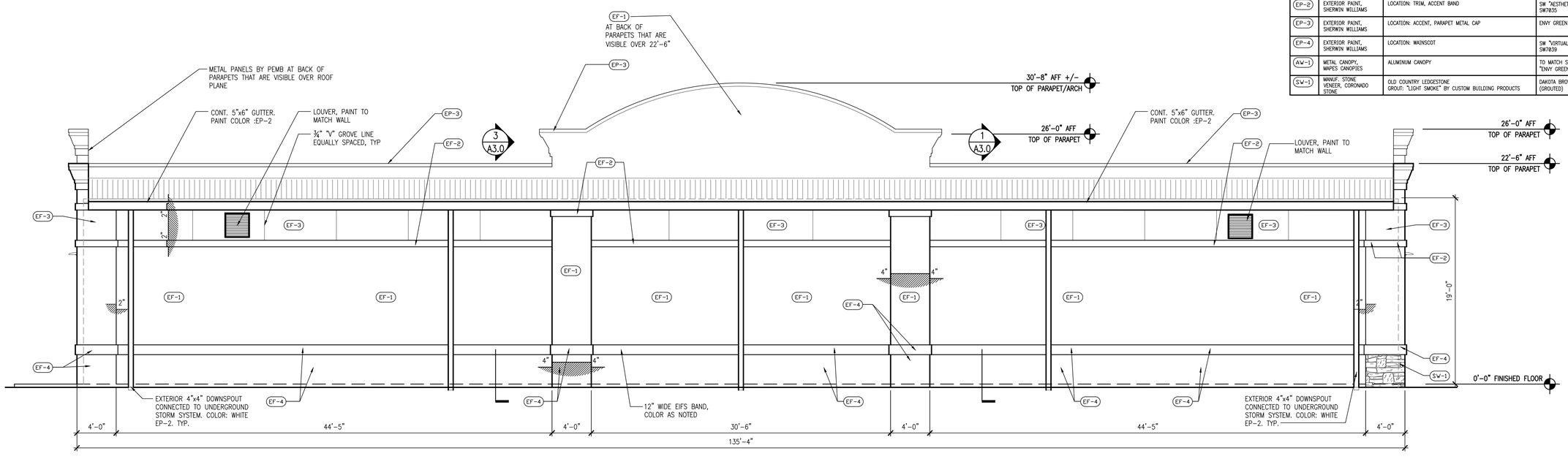

2 REAR ELEVATION- SOUTH

3/16"-1'-0"

INTERPLAN LLC
ARCHITECTURE
ENGINEERING
INTERIOR DESIGN
PROJECT MANAGEMENT

AA 003420
CA 8660

604 COURTLAND STREET
SUITE 100
ORLANDO, FLORIDA 32804
PH 407.645.5008
FX 407.629.9124

SEAL:

THIS DOCUMENT IS NOT FOR REGULATORY APPROVAL, PERMITTING, OR CONSTRUCTION.

NO DATE REMARKS

REVISIONS

SHELL BUILDING for DOLLAR TREE

N HWY 19 & CR 44
EUSTIS, FL

PROJECT NO: 2018.0328
DATE: 08-27-2018

A2.0
EXTERIOR ELEVATIONS

CHECKED: RC DRAWN: MS

COPYRIGHT © 2018 INTERPLAN LLC. FILE:\SERVER2\PROJECTS\2018\2018.0328 DOLLAR TREE EUSTIS\CAD\ARCHITECT\A2.0 EXTERIOR ELEVATIONS.DWG

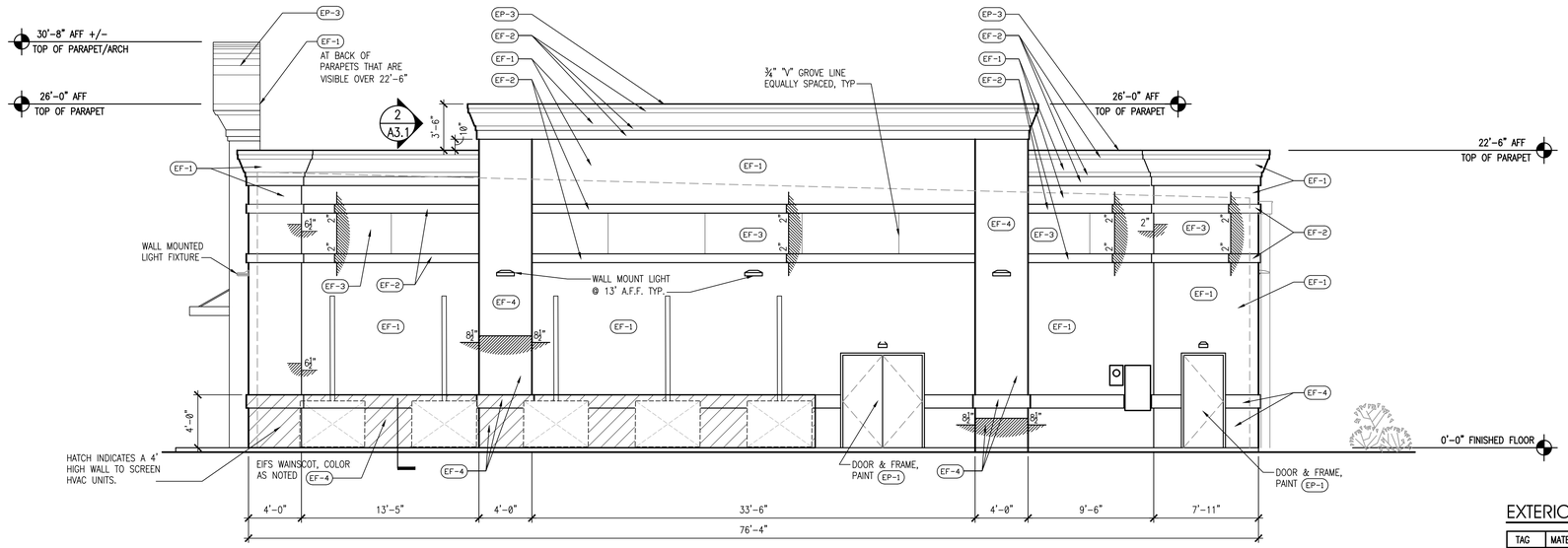

1 WEST SIDE ELEVATION 3/16"-1'-0"

NOTES:
SIGNAGE AND AWNINGS TO BE PERMITTED SEPARATELY BY SIGN COMPANY/CONTRACTOR.

SIGNAGE AND AWNINGS TO BE PROVIDED, PERMITTED AND INSTALLED BY SIGN COMPANY.

EXTERIOR FINISH LEGEND:

TAG	MATERIAL/ MANUF	DESCRIPTION	COLOR
EF-1	EIFS MANUFACTURER: STO	EXTERIOR INSULATED STUCCO SYSTEM/ FIELD	NA10-0052 SANDSTONE #93860
EF-2	EIFS MANUFACTURER: STO	EXTERIOR INSULATED STUCCO SYSTEM/ TRIM- ACCENT BANDS	NA10-0053 SMOKED PUTTY #93240
EF-3	EIFS MANUFACTURER: STO	EXTERIOR INSULATED STUCCO SYSTEM / ACCENT BAND	NA10-0054 OR TO MATCH SW "ENVY"
EF-4	EIFS MANUFACTURER: STO	EXTERIOR INSULATED STUCCO SYSTEM / WAINSCOT	NA10-0055 TO MATCH SW "VIRTUAL TAUPE" SW7039
EP-1	EXTERIOR PAINT, SHERWIN WILLIAMS	LOCATION: MAIN BODY, FIELD	SW "BALANCED BEIGE" SW7037
EP-2	EXTERIOR PAINT, SHERWIN WILLIAMS	LOCATION: TRIM, ACCENT BAND	SW "AESTHETIC WHITE" SW7035
EP-3	EXTERIOR PAINT, SHERWIN WILLIAMS	LOCATION: ACCENT, PARAPET METAL CAP	ENVY GREEN
EP-4	EXTERIOR PAINT, SHERWIN WILLIAMS	LOCATION: WAINSCOT	SW "VIRTUAL TAUPE" SW7039
AW-1	METAL CANOPY, MAPES CANOPIES	ALUMINUM CANOPY	TO MATCH SW PAINT "ENVY GREEN"
SW-1	MANUF. STONE VENEER, CORONADO STONE	OLD COUNTRY LEDGESTONE GROUT: "LIGHT SMOKE" BY CUSTOM BUILDING PRODUCTS	DAKOTA BROWN (GROUTED)

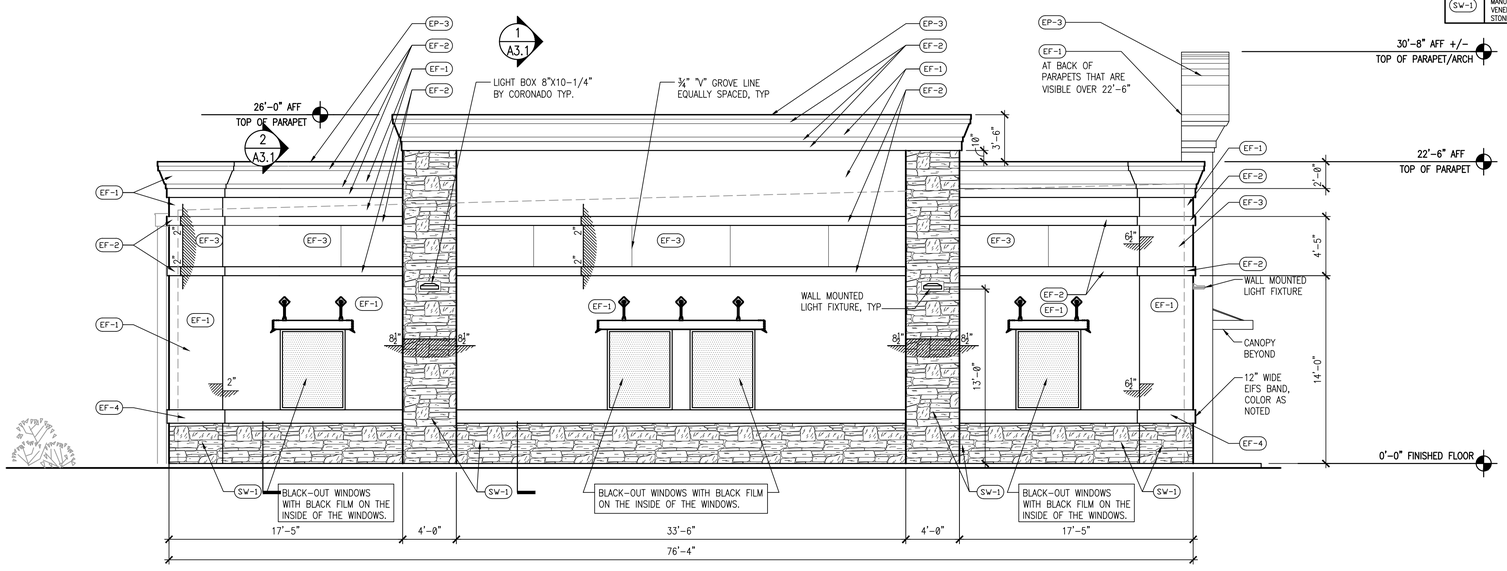

2 EAST SIDE ELEVATION- SECONDARY FACADE 3/16"-1'-0"

INTERPLAN LLC
ARCHITECTURE
ENGINEERING
INTERIOR DESIGN
PROJECT MANAGEMENT

AA 003420
CA 8660

604 COURTLAND STREET
SUITE 100
ORLANDO, FLORIDA 32804
PH 407.645.5008
FX 407.629.9124

SEAL:

THIS DOCUMENT IS NOT FOR REGULATORY APPROVAL, PERMITTING, OR CONSTRUCTION.

NO	DATE	REMARKS

REVISIONS

SHELL BUILDING for DOLLAR TREE

N HWY 19 & CR 44
EUSTIS, FL

PROJECT NO: 2018.0328
DATE: 08-27-2018

A2.1

EXTERIOR ELEVATIONS

CHECKED: RC DRAWN: MS

COPYRIGHT © 2018 INTERPLAN LLC

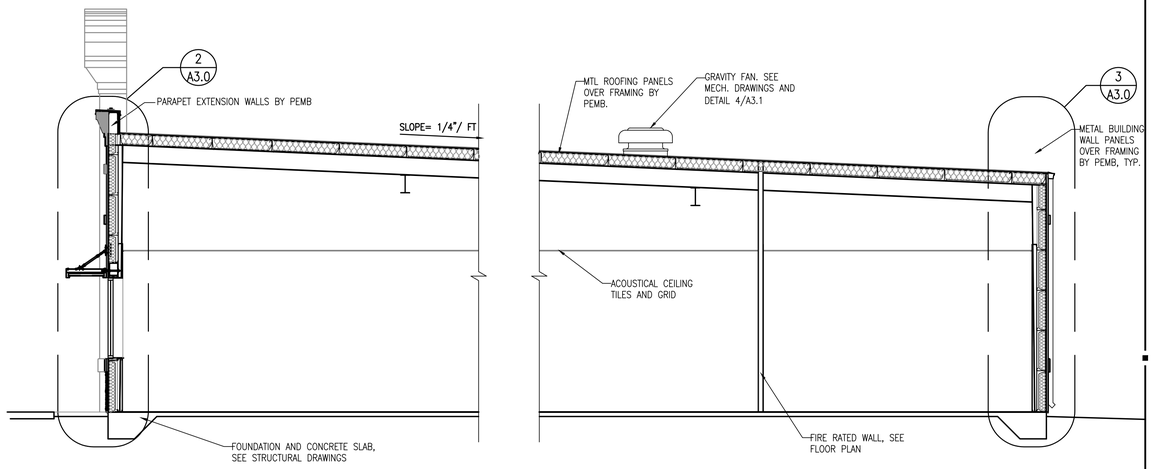

1 BUILDING SECTION 3/16"=1'-0"

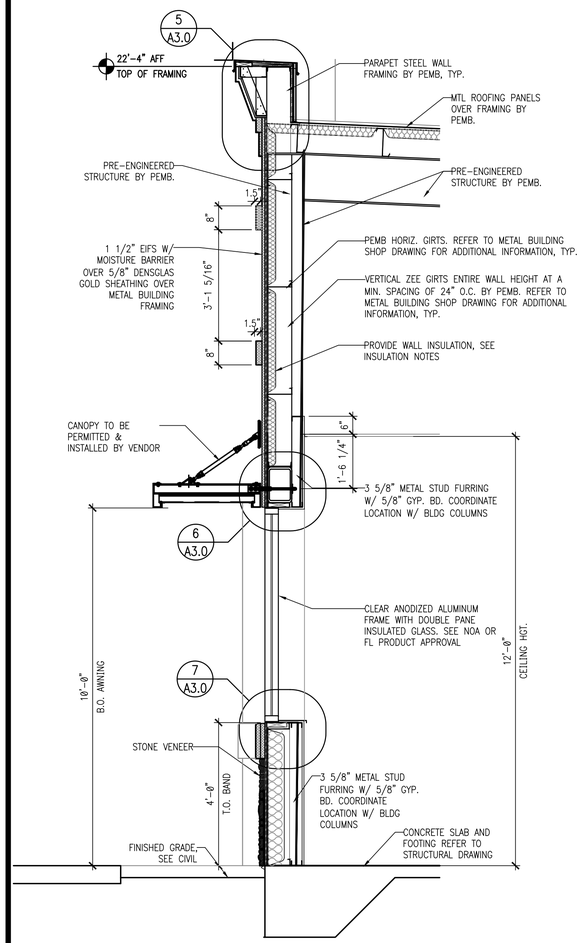

2 WALL SECTION 1/2"=1'-0"

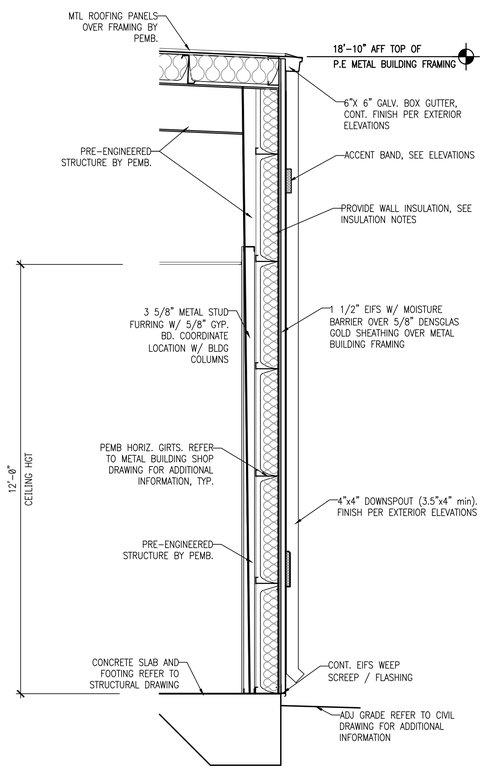

3 WALL SECTION 1/2"=1'-0"

INSULATION NOTE:
ALL CUTS MADE IN THE VAPOR BARRIER THAT IS APPLIED BELOW THE PURLINS AS A PART OF THE INSULATION LINER SYSTEM IN ORDER TO MAKE ATTACHMENTS TO THE PURLINS, OR FOR ANY OTHER REASON, SHALL BE OF THE MINIMUM SIZE REQUIRED TO PERFORM THE WORK NEEDED AND SHALL BE OF TAPED AND SEALED IN ACCORDANCE WITH THE MANUFACTURER OF THE VAPOR BARRIER WITH PRODUCTS SUPPLIED BY THE MANUFACTURER OF THE VAPOR BARRIER

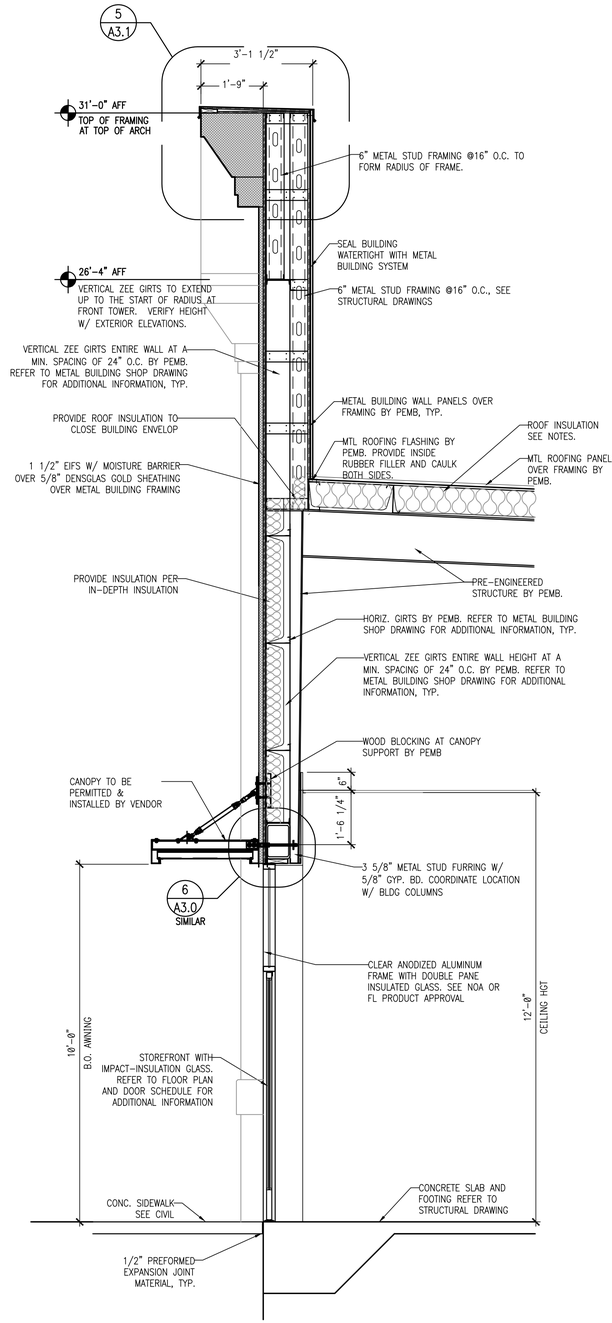

4 WALL SECTION 1/2"=1'-0"

INSULATION NOTES

ALL WALL AND ROOF INSULATION TO MEET THE F.B.C. REQUIREMENTS

* WALL INSULATION SYSTEM SHALL USE R-13 MIN. FILLER BLANKETS IN THE GIRT SPACES WITH THERMAL BREAK TAPE (*QUICK STOP*) ON THE OUTSIDE AND 1/4" SNAP-R THERMAL BLOCKS ON THE INTERIOR OF THE GRITS HAVING A TESTED TOTAL R-VALUE OF 13 MIN.

* ROOF INSULATION SHALL USE FILLER BLANKETS UNDER THE METAL STANDING SEAM ROOFING. THE SYSTEM SHALL HAVE AN INSTALLED R-VALUE OF NOT LESS THAN 19 MIN.. USE SYSTEM WITH R11 WHITE FINISH LINER.

INSULATION INSTALLED SHALL PASS THE REQUIREMENTS OF THE ASTM E2178-03 "STANDARD TEST METHOD FOR AIR PERFORMANCE OF BUILDING MATERIALS."

INSULATION USED MUST HAVE A FLAME SPREAD OF NOT GREATER THAN 25 AND A SMOKE DEVELOPMENT OF NOT GREATER THAN 450 INCLUDING THE INSULATION AND FACING. INSULATION TO HAVE A LIGHT REFLECTIVE WHITE POLY FACING (POLY-SCRIM-KRAFT, PSK). FINISH IS WHITE.

FOUNDATION PERIMETER INSULATION AS REQUIRED BY LOCAL ENERGY REQUIREMENTS.

FOLLOW LOCAL ENERGY CODE (IECC OR ASHRAE STANDARD 90.1)

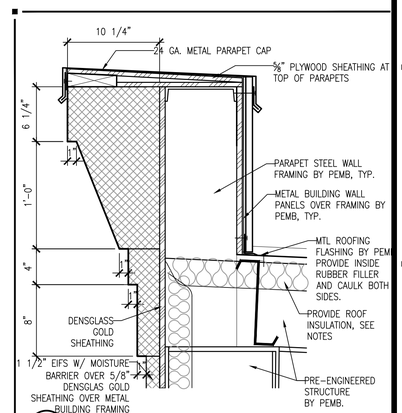

5 PARAPET DETAIL 1 1/2"=1'-0"

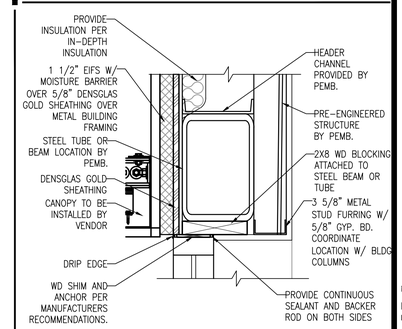

6 HEAD DETAIL 1 1/2"=1'-0"

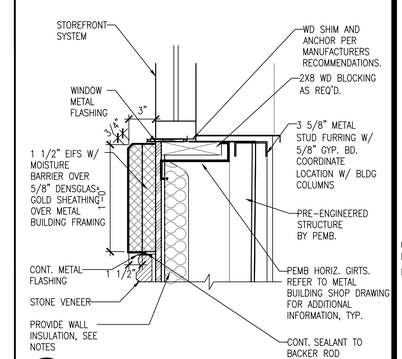

7 SILL DETAIL 1 1/2"=1'-0"

INTERPLAN PLLC
ARCHITECTURE
ENGINEERING
INTERIOR DESIGN
PROJECT MANAGEMENT

AA 003420
CA 8660

604 COURTLAND STREET
SUITE 100
ORLANDO, FLORIDA 32804
PH 407.645.5008
FX 407.629.9124

SEAL:

THIS DOCUMENT IS NOT FOR REGULATORY APPROVAL, PERMITTING, OR CONSTRUCTION.

NO	DATE	REMARKS

REVISIONS

SHELL BUILDING for DOLLAR TREE

N HWY 19 & CR 44
EUSTIS, FL

PROJECT NO: 2018.0328
DATE: 08-27-2018

A3.0

BUILDING & WALL SECTIONS

CHECKED: RC DRAWN: MS

COPYRIGHT © 2018 INTERPLAN PLLC FILE:S:\BIDS\VICTORFORD\BIDS FOR OTHERS\HIGHSTREET\CHICHINE SHELL\DOCUMENTS\A3.1A2 THE EVIDENCE HAVE EDIT EMPLOYEE OF VICTOR FORD AND THEY HAVE THE PRESTIGE OF REPRODUCTION, ADAPTATION OR DISTRIBUTION OF THIS DOCUMENT WITHOUT THE PERMISSION OF INTERPLAN PLLC.

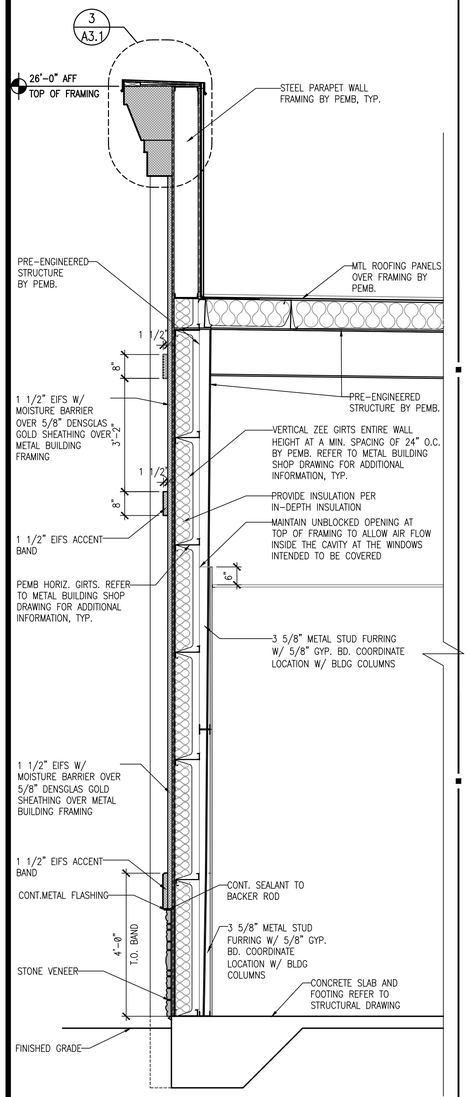

1 WALL SECTION 1/2"=1'-0"

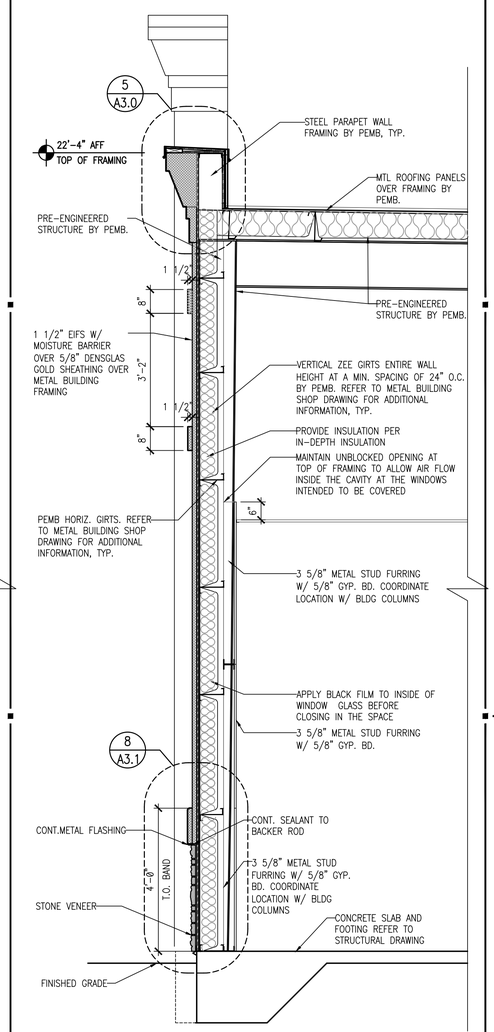

2 WALL SECTION 1/2"=1'-0"

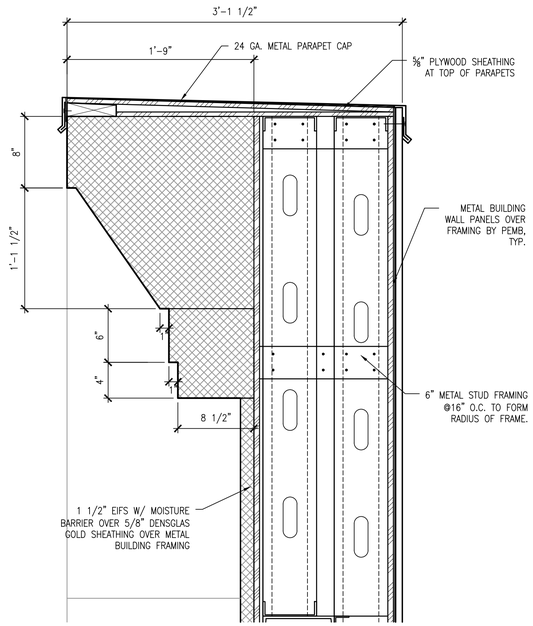

5 DETAIL AT ARCHED PARAPET 1 1/2"=1'-0"

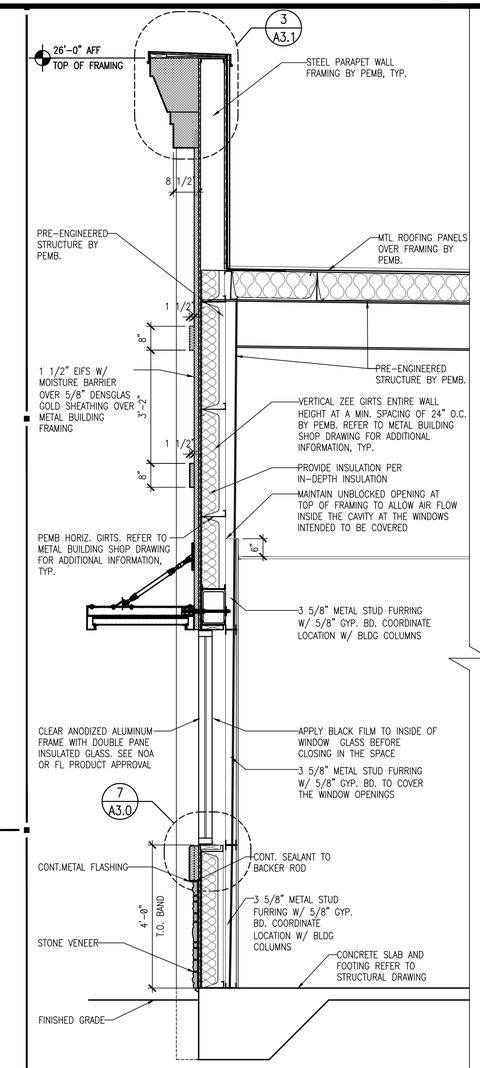

7 WALL SECTION 1/2"=1'-0"

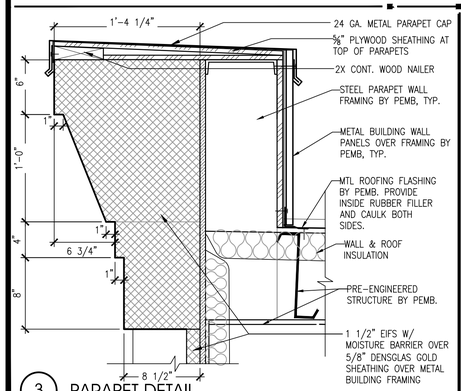

3 PARAPET DETAIL 1 1/2"=1'-0"

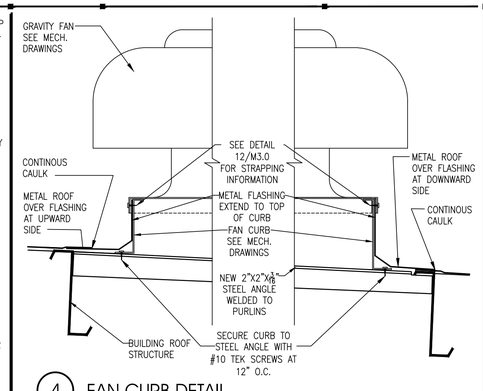

4 FAN CURB DETAIL 1 1/2"=1'-0"

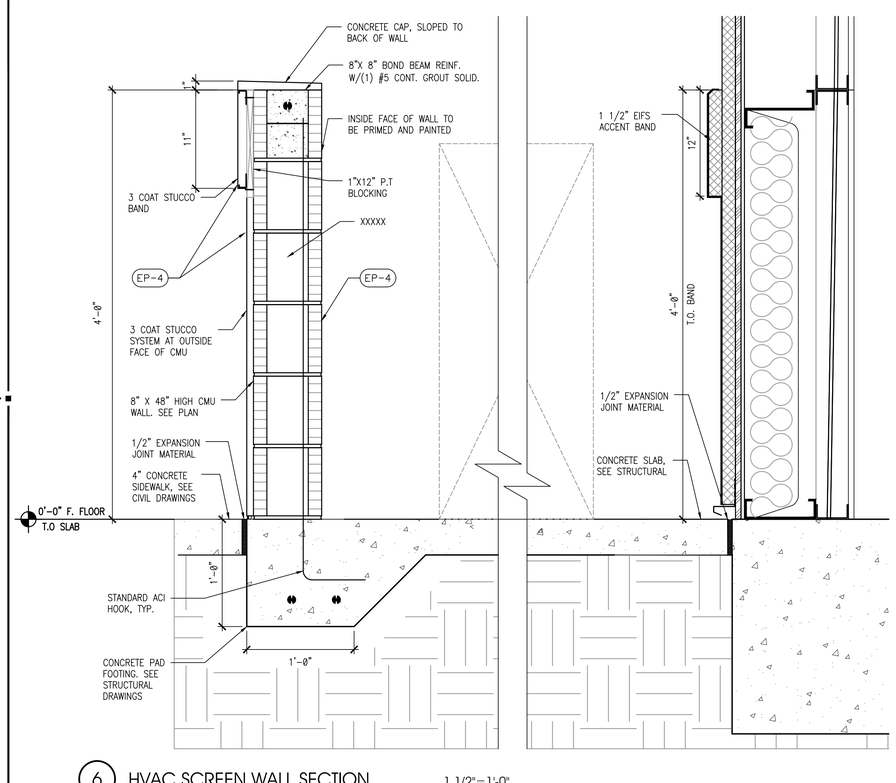

6 HVAC SCREEN WALL SECTION 1 1/2"=1'-0"

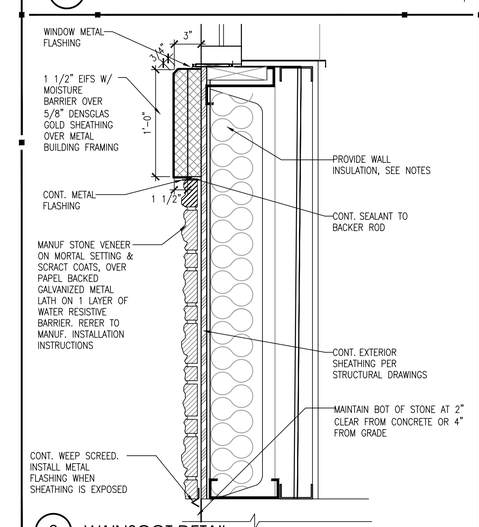

8 WAINSCOT DETAIL 1 1/2"=1'-0"

INTERPLAN PLLC

ARCHITECTURE
ENGINEERING
INTERIOR DESIGN
PROJECT MANAGEMENT

AA 003420
CA 8660

604 COURTLAND STREET
SUITE 100
ORLANDO, FLORIDA 32804
PH 407.645.5008
FX 407.629.9124

SEAL:

THIS DOCUMENT IS NOT FOR REGULATORY APPROVAL, PERMITTING, OR CONSTRUCTION.

NO	DATE	REMARKS

REVISIONS

SHELL BUILDING for DOLLAR TREE

N HWY 19 & CR 44
EUSTIS, FL

PROJECT NO: 2018.0328
DATE: 08-27-2018

A3.1

WALL SECTIONS & DETAILS

CHECKED: RC DRAWN: MS

COPYRIGHT © 2018 INTERPLAN PLLC

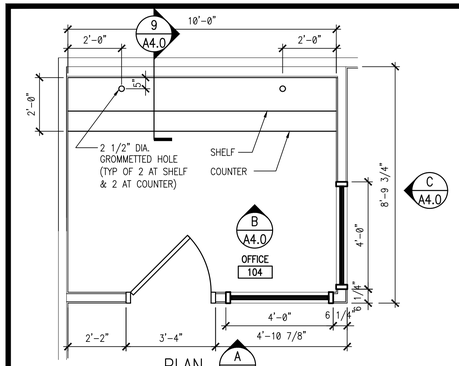

PLAN

1 ENLARGED OFFICE PLAN & ELEVATIONS 1/2"=1'-0"

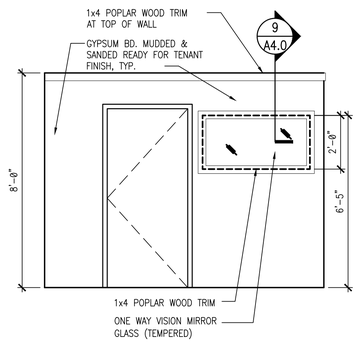

ELEVATION A

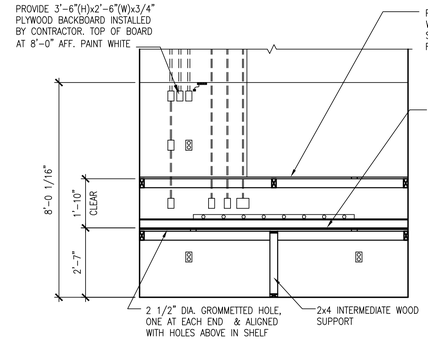

ELEVATION B

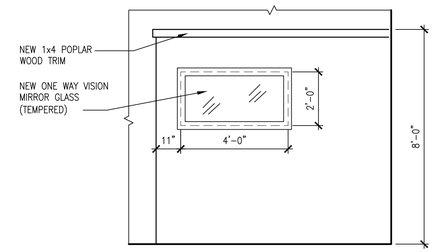

ELEVATION C

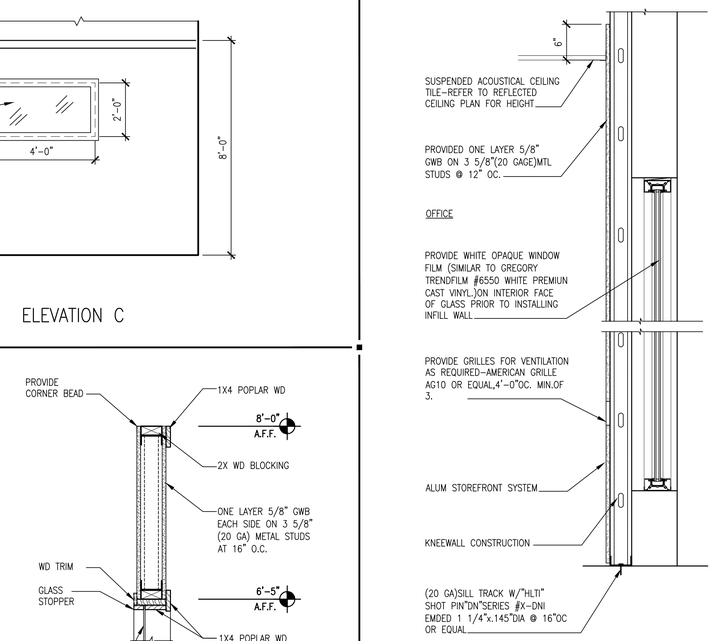

2 HEAD/JAMB DETAIL 1"=1'-0"

3 SECTION AT KNEEWALL DT-WALL SECTION 1"=1'-0"

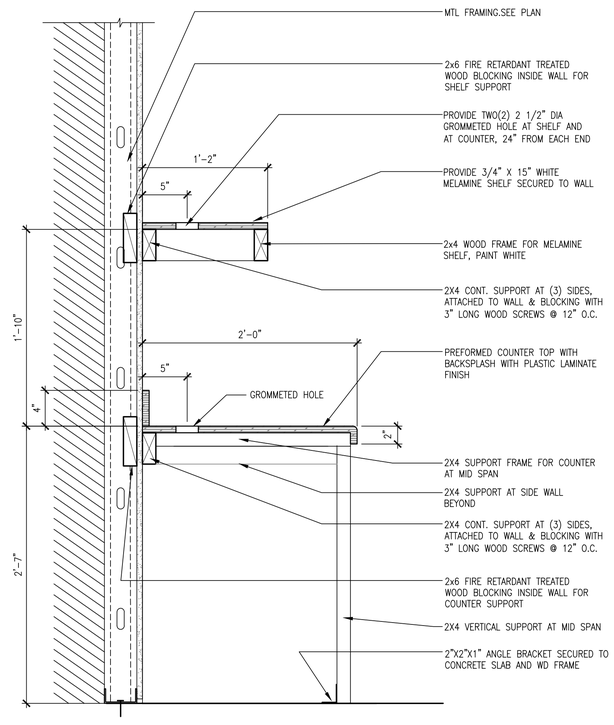

4 SECTION AT OFFICE COUNTER 1 1/2"=1'-0"

DT-CounterDetail-02

INTERPLAN PLC

ARCHITECTURE
ENGINEERING
INTERIOR DESIGN
PROJECT MANAGEMENT

AA 003420
CA 8660

604 COURTLAND STREET
SUITE 100
ORLANDO, FLORIDA 32804
PH 407.645.5008
FX 407.629.9124

SEAL:

THIS DOCUMENT IS NOT FOR REGULATORY APPROVAL, PERMITTING, OR CONSTRUCTION.

NO DATE REMARKS

REVISIONS

SHELL BUILDING for DOLLAR TREE

N HWY 19 & CR 44
EUSTIS, FL

PROJECT NO: 2018.0328
DATE: 08-27-2018

A4.0

ENLARGED PLAN & DETAILS

CHECKED: RC DRAWN: MS

COPYRIGHT © 2018 INTERPLAN PLLC. R:\SERVER\VDOT\DWG\R-W & ENGINEERING\RESTRICTIONS\SHELL BUILDING\DOLLAR TREE\SHELL BUILDING\DOLLAR TREE\DWG\SHELL BUILDING\DOLLAR TREE\DWG\SHELL BUILDING\DOLLAR TREE\DWG

NOTE:
GC TO PROVIDE BLOCKING INSIDE THE WALLS TO INSTALL PLUMBING FIXTURES AND ACCESSORIES.

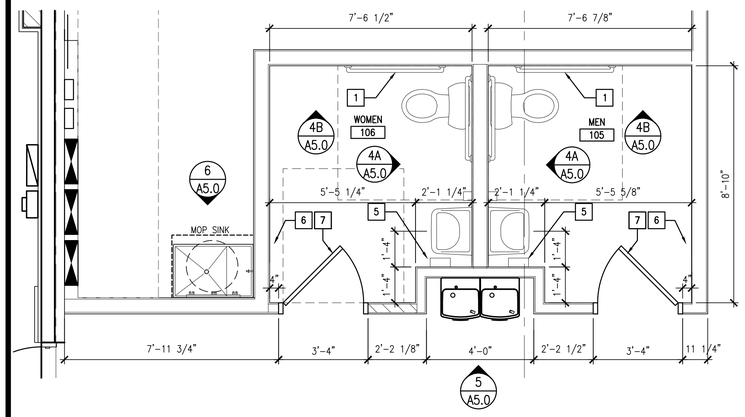

DOLLAR TREE ENLARGED RESTROOM PLAN

1 ENLARGED RESTROOM PLAN 3/8"=1'-0"

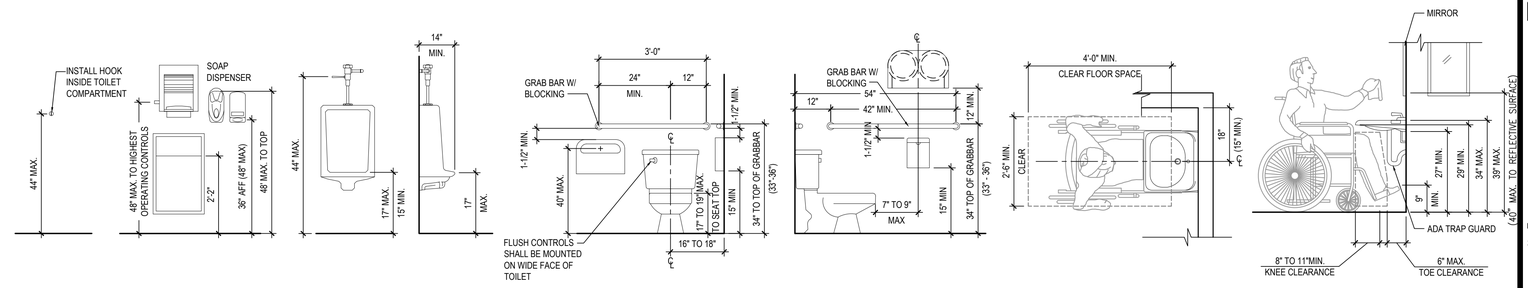

CLOTH HOOK | PAPER TOWEL & SOAP DISPENSER | URINAL - FRONT VIEW | URINAL - SIDE VIEW | FLOOR MOUNTED TOILET-FRONT VIEW | FLOOR MOUNTED TOILET-SIDE VIEW | LAVATORY - FLOOR CLEARANCE | LAVATORY - MOUNTING HEIGHTS

INSULATE TRAP & HOT WATER AT HANDICAPPED LAVS.

2 STANDARD ACCESSIBLE MOUNTING HEIGHTS & CLEARANCES NTS

ADAdetail_FL.dwg

A. 5/8" HIGH BY 1/32" RAISED LETTERING (UNLESS NOTED OTHERWISE)
B. GRADE 2 BRAILLE POSITIONED DIRECTLY BELOW TEXT
C. 1/32" RAISED PICTOGRAM WITH 70% CONTRASTING BETWEEN BACKGROUND AND TEXT. FINISH TO BE EGGSHELL.
D. COLOR TO BE BLUE BACKGROUND WITH WHITE LETTERS.

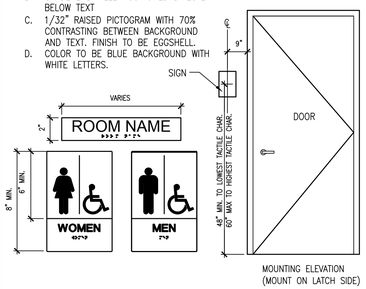

MOUNTING ELEVATION (MOUNT ON LATCH SIDE)

3 ACCESSIBILITY SIGNAGE MOUNTING DETAIL NTS

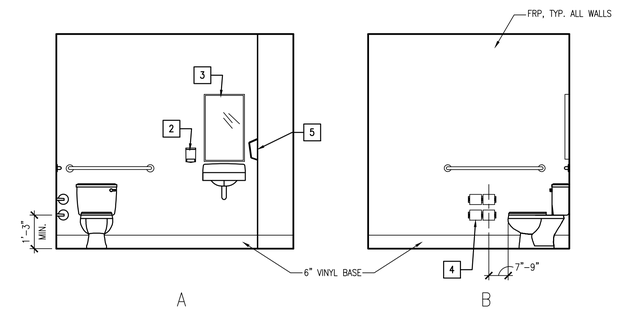

4 TYPICAL RESTROOM ELEVATIONS 3/8"=1'-0"

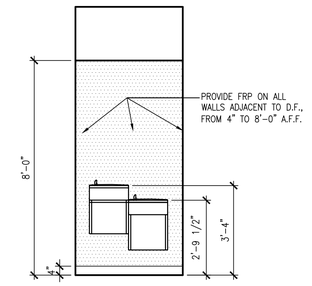

5 DRINKING FOUNTAIN ELEVATION 3/8"=1'-0"

TOILET ACCESSORIES

1. GRAB BAR – 250 LBS. MINIMUM. BOBRICK WASHROOM EQUIPMENT, INC. PROVIDE THE REQUIRED QUANTITY AND LENGTH AS INDICATED ON THE DRAWINGS OR AS REQUIRED BY THE GOVERNING CODE. THE BAR SHALL BE 1 1/2" IN DIAMETER AND MOUNTED WITH 1 1/2" CLEARANCE FROM THE WALL.
2. WALL MOUNTED SOAP DISPENSER SUPPLIED BY VENDOR AND INSTALLED BY G.C.
3. MIRROR (BOTTOM OF REFLECTIVE SURFACE AT 40" MAXIMUM HEIGHT) MODEL B-165-1836 (18"x36") STAINLESS STEEL CHANNEL FRAME MIRROR WITH THEFT RESISTANT SCREWS BY BOBRICK WASHROOM EQUIPMENT, INC. OR APPROVED EQUIVALENT.
4. TOILET PAPER HOLDER TWO ROLL HOLDER TYPE, 2 PER RESTROOM.
5. ELECTRIC HAND DRYER PROVIDED AND INSTALLED BY TENANT. LANDLORD'S G.C. TO PROVIDE J-BOX FOR FUTURE HAND DRYER.
6. PROVIDE WALL MOUNTED TYPE DOOR STOP AT HANDLE HEIGHT.
7. COAT HOOK – BOBRICK MODEL B-6717 TO BE MOUNTED ON INSIDE OF EACH RESTROOM DOOR @ 38"-40" A.F.F.

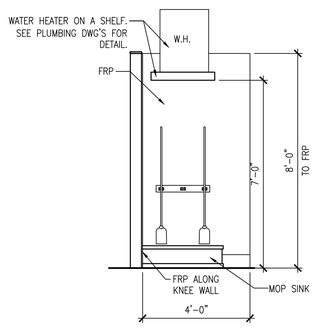

6 MOP SINK ELEVATION 3/8"=1'-0"

UTILITYCABINSINK_DESK ELEVATION-3/8"=1'-0"

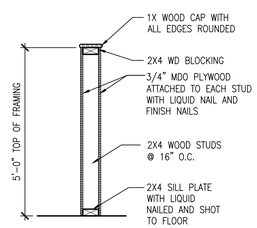

NOTE:
PROVIDE WOOD CORNERS GUARD @ ALL OUTSIDE CORNERS

7 LOW WALL DETAIL 3/4"=1'-0"

WD_HEIGHT_WALL-01

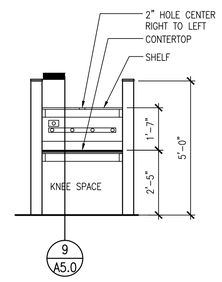

8 DESK ELEVATION 3/8"=1'-0"

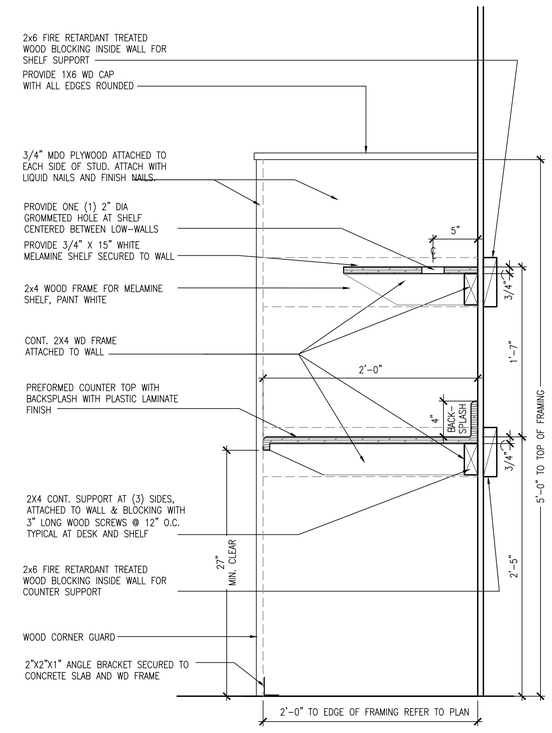

9 SECTION AT DESK 1 1/2"=1'-0"

DT-Section at Desk-01

INTERPLAN PLLC
ARCHITECTURE
ENGINEERING
INTERIOR DESIGN
PROJECT MANAGEMENT

AA 003420
CA 8660

604 COURTLAND STREET
SUITE 100
ORLANDO, FLORIDA 32804
PH 407.645.5008
FX 407.629.9124

SEAL:

THIS DOCUMENT IS NOT FOR REGULATORY APPROVAL, PERMITTING, OR CONSTRUCTION.

NO	DATE	REMARKS

REVISIONS

SHELL BUILDING for DOLLAR TREE

N HWY 19 & CR 44
EUSTIS, FL

PROJECT NO: 2018.0328
DATE: 08-27-2018

A5.0

ENLARGED RESTROOM

CHECKED: RC DRAWN: MS

COPYRIGHT © 2018 INTERPLAN PLLC FILE:S:\PROJECTS\2018\2018-0328 DOLLAR TREE EUSTIS FL\CAD\DWG\A5.0 ENLARGED RESTROOM.DWG LAYOUT: A5.0 ENLARGED RESTROOM PLOTTED BY: RICARDO CASTILLO ON 8/27/2018 9:57:00 AM

DOOR SCHEDULE & NOTES:

DOOR NO	SIZE	DOOR MATL.	DOOR FINISH	DOOR TYPE	FRAME MATL.	FRAME FINISH	FRAME TYPE	LABEL	HDWR. SET #	REMARKS	LOCATION
1	6'-0" x 7'-0" x 1-3/4"	ALUM.	–	A	ALUM.	–	–	–	01	–	STORE FRONT DOOR
2	3'-0" x 6'-8" x 1-3/4"	S.C. WD	–	B	H.M.	–	1	–	02	–	OFFICE
3	6'-0" x 7'-0" x 1-3/4"	H.M.	–	C	H.M.	–	2	–	03	–	STOCK ROOM
4	6'-0" x 7'-0" x 1-3/4"	H.M.	–	D	H.M.	–	2	–	04	–	DELIVERY DOOR– EXTERIOR
5	3'-0" x 6'-8" x 1-3/4"	S.C. WD	–	E	H.M.	–	1	–	05	–	MEN RESTROOM
6	3'-0" x 6'-8" x 1-3/4"	S.C. WD	–	E	H.M.	–	1	–	05	–	WOMEN RESTROOM
7	3'-0" x 7'-0" x 1-3/4"	H.M.	–	F	H.M.	–	1	–	06	–	REAR DOOR – HALLWAY

ALUM. = ALUMINUM H.M. = HOLLOW METAL S.C. WD. = SOLID CORE WOOD STL. = STEEL

HDWR. SET	DESCRIPTION	MODEL no.	FINISH	MANUFACTURER
SET #01	STOREFRONT–ENTRY DOOR	FL# 10008–R4		
HINGE LOCK CLOSER SEALS SWEEP THRESHOLD	FULL MORTISE (3 PR) PUSH/PULL DEVICE WITH PANIC EXIT DEVICE SURFACE CLOSER (PUSH SIDE) WEATHER SEAL DOOR SWEEP DOOR THRESHOLD	PROVIDE THE HARDWARE LISTED IN THE SET. REFER TO THE N.O.A. OR FL PRODUCT APPROVAL FOR THE HARDWARE TESTED IN THE ASSEMBLY	630 630 AL AL AL AL	PROVIDE THE HARDWARE LISTED IN THE SET. REFER TO THE N.O.A. OR FL PRODUCT APPROVAL FOR THE HARDWARE TESTED IN THE ASSEMBLY
SET #02	OFFICE			
HINGE LOCK SILENCER STOP	FULL MORTISE (3 PR) OFFICE FUNCTION DOOR SILENCER (3/DOOR) WALL STOP	BB1191 4.5x4.5 ND50PD 307D ROCKWOOD 409	626 626 GRY	HAGER OR EQ. SCHLAGE OR EQ. HAGER OR EQ.
SET #03	STOCK ROOM			
HINGE CLOSER SILENCER	FULL MORTISE (3 PR) 2 SURFACE CLOSERS (PUSH SIDE) DOOR SILENCER (3/DOOR) 2 PULL HANDLES (ON STOCKROOM SIDE) 1 SET AUTOMATIC FLUSH BOLTS (ON INACTIVE LEAF) 1 STEEL ASTRAGAL 2 PUSH PLATES	BB1191 4.5x4.5 5100 REG 307D	626 AL GRY	HAGER OR EQ. HAGER OR EQ. HAGER OR EQ.
SET #04	DELIVERY DOOR	FL 15869.1		
HINGE LOCK CLOSER SEALS SWEEP THRESHOLD	FULL MORTISE (3 PR) PANIC EXIT DEVICE (NON–ARLARMED) 2 SURFACE CLOSER WITH STOP ARMS (PULL SIDE) WEATHER SEAL DOOR SWEEP DOOR THRESHOLD (2 SETS FLUSH BOLTS) NO MULLION BETWEEN DOORS	PROVIDE THE HARDWARE LISTED IN THE SET. REFER TO THE N.O.A. OR FL PRODUCT APPROVAL FOR THE HARDWARE TESTED IN THE ASSEMBLY	630 626 AL AL AL AL	PROVIDE THE HARDWARE LISTED IN THE SET. REFER TO THE N.O.A. OR FL PRODUCT APPROVAL FOR THE HARDWARE TESTED IN THE ASSEMBLY
SET #05	TOILET ROOM			
HINGE LOCK CLOSER KICK PLATE SILENCER STOP	FULL MORTISE (3 PR) PRIVACY FUNCTION DOORFACE CLOSER (PULL SIDE) KICK PLATE (PUSH SIDE) DOOR SILENCER (3/DOOR) WALL STOP	BB1191 4.5x4.5 AL40S 5100 REG 194S 8"x34" 307D ROCKWOOD 409	626 626 AL 630 GRY	HAGER OR EQ. SCHLAGE OR EQ. HAGER OR EQ. HAGER OR EQ. HAGER OR EQ.
SET #06	REAR DOOR – HALLWAY	FL 15869.1		
HINGE LOCK CLOSER SEALS SWEEP THRESHOLD	FULL MORTISE (3 PR) PANIC EXIT DEVICE (ALARMED) SURFACE CLOSER WITH STOP ARM (PULL SIDE) WEATHER SEAL DOOR SWEEP DOOR THRESHOLD	PROVIDE THE HARDWARE LISTED IN THE SET. REFER TO THE N.O.A. OR FL PRODUCT APPROVAL FOR THE HARDWARE TESTED IN THE ASSEMBLY	630 626 AL AL AL AL	PROVIDE THE HARDWARE LISTED IN THE SET. REFER TO THE N.O.A. OR FL PRODUCT APPROVAL FOR THE HARDWARE TESTED IN THE ASSEMBLY

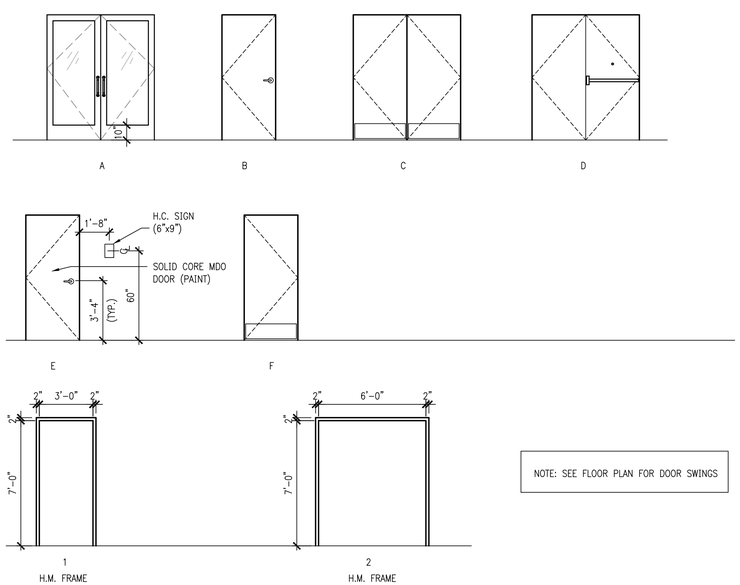

NOTE: SEE FLOOR PLAN FOR DOOR SWINGS

1 DOOR FRAMES & TYPES 1/4" = 1'-0"

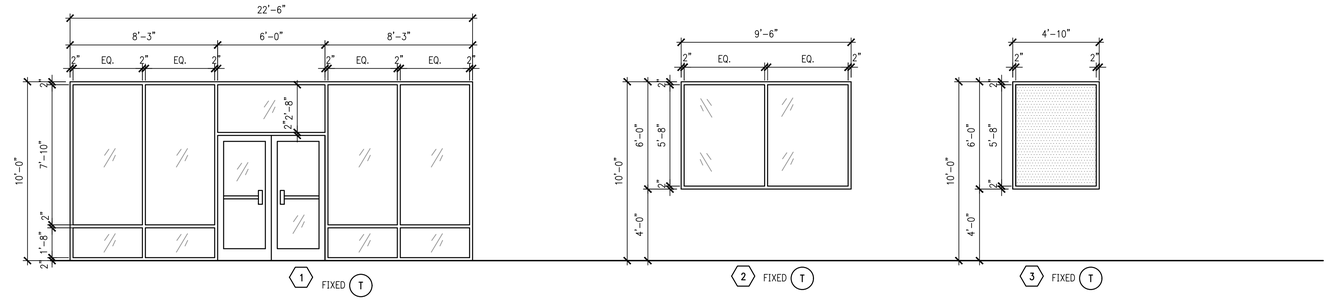

STOREFRONT SYSTEM:
BASIS OF DESIGN: TRIFAB 451UT THERMAL BREAK, SCREW SPLINE, CENTER GLASS

2 WINDOW TYPES 1/4" = 1'-0"

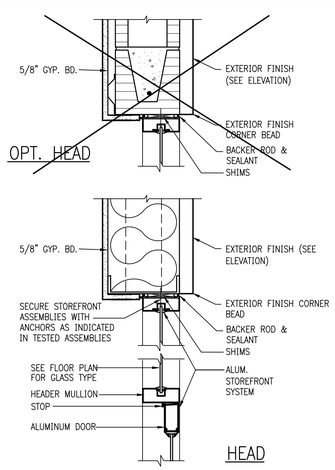

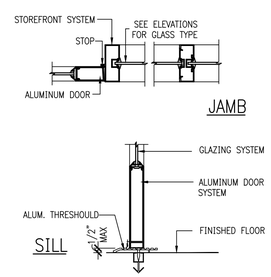

3 STOREFRONT DOOR 1 1/2"=1'-0"

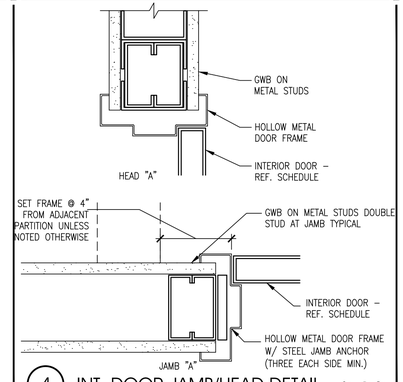

4 INT. DOOR JAMB/HEAD DETAIL 3"=1'-0"

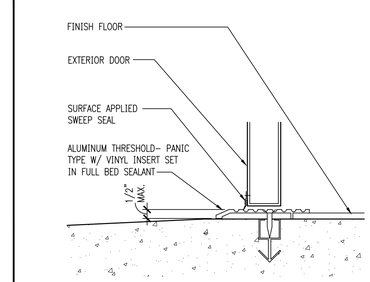

5 TYP. EXT. DOOR THRESHOLD 3"=1'-0"

GENERAL STOREFRONT NOTES:

1. ALL EXTERIOR STOREFRONT WINDOWS AND DOORS MUST MEET OR EXCEED THE DESIGNED WIND PRESSURES INDICATED AND BE INSTALLED PER MANUFACTURER'S RECOMMENDATIONS. WINDOWS AND DOORS MUST BE APPROVED BY ANSI/ AAMA/ NWWDA 101/I.S. – 2 STANDARD AND BEAR AN AAMA OR WDMA LABEL IDENTIFYING THE MANUFACTURE, PERFORMANCE CHARACTERISTICS AND APPROVED PRODUCT TESTING ENTITY.
2. STOREFRONT SUPPLIER SHALL PREPARE ENGINEERING DRAWINGS SIGNED AND SEALED BY THE SPECIALTY ENGINEER, FOR SUBMISSION TO AUTHORITIES HAVING JURISDICTION. FIELD VERIFY DIMENSIONS BEFORE PREPARING DRAWING.
3. ALL STOREFRONT GLAZING TO BE 1" DOUBLE PANE, INSULATED, LOW–E,
   PRODUCT: PPG SOLARBAN 70XL(2)–OPTIGRAY,
   THERMAL VALUES: U–VALUE= 0.26, SHGC= 0.24, SC= 0.28
   MINIMUM THERMAL VALUES: U–VALUE= 0.50, SHGC= 0.25,
4. STOREFRONT & DOOR COLOR: DARK BRONZE.
5. METAL DOOR: FLUSH WUTH POLYSTYRENE CORE
   MANUF: REPUBLIC DOORS
   THERMAL PERFORMANCE (MINIMUM): U–VALUE= 0.61; R VALUE= 4.75
6. ENTRANCE STOREFRONT DOORS:
   MINIMUM THERMAL VALUES: U–VALUE= 0.83, SHGC= 0.30,

T = TEMPERED GLASS

GENERAL HARDWARE NOTES:

1. THRESHOLDS AT EGRESS DOORS SHALL BE NO MORE THAN 1/2" (MAX) HEIGHT AFF.
2. ALL DOOR HANDLES, PULLS, LATCHES, LOCKS AND OTHER OPERATING DEVICES SHALL BE INSTALLED 34" (MIN) TO 44" (MAX) AFF AND SHALL BE "SINGLE–HANDED" OPERABLE WITHOUT USE OF KEY OR SPECIAL KNOWLEDGE.
3. WHERE EGRESS DOORS ARE USED IN PAIRS, THE UNLATCHING OF THE LEAF SHALL NOT REQUIRE MORE THAN ONE (1) OPERATION AS MENTIONED IN GENERAL HARDWARE NOTE #2 ABOVE.
4. CONTROLS AND OPERATING MECHANISMS SHALL BE LEVER–TYPE (OR EQUAL) PROVIDING OPERATION WITH ONE HAND AND NOT REQUIRE TIGHT GRASPING, PINCHING, OR TWISTING OF THE WRIST.
5. THE FORCE REQUIRED TO ACTIVATE CONTROLS OF INTERIOR HINGED DOORS SHALL BE NO GREATER THAN 5 POUNDS (22.2N).
6. DOORS EQUIPPED WITH CLOSERS SHALL BE ADJUSTED SO THAT THE SWEEP PERIOD FROM AN OPEN POSITION OF 70 DEGREES WILL TAKE AT LEAST 3 SECONDS TO MOVE TO A POINT 3" FROM THE LATCH, MEASURED FROM THE LEADING EDGE OF THE DOOR.

INTERPLAN PLLC
ARCHITECTURE
ENGINEERING
INTERIOR DESIGN
PROJECT MANAGEMENT

AA 003420
CA 8660

604 COURTLAND STREET
SUITE 100
ORLANDO, FLORIDA 32804
PH 407.645.5008
FX 407.629.9124

SEAL:

THIS DOCUMENT IS NOT FOR REGULATORY APPROVAL, PERMITTING, OR CONSTRUCTION.

NO	DATE	REMARKS

REVISIONS

SHELL BUILDING for DOLLAR TREE

N HWY 19 & CR 44
EUSTIS, FL

PROJECT NO: 2018.0328
DATE: 08-27-2018

A6.0

DOOR & WINDOW SCHEDULE

CHECKED: RC DRAWN: MS

COPYRIGHT © 2018 INTERPLAN PLLC FILE:S:\BIBER\VICTOR\FORMS\A-CAD-OTHER\FINISH SHEETS\TRIFAB 451UT CHANGE SHEETS\TRIFAB 451UT CHANGE SHEET.DWG DATE: FEB 07, 2018 - 10:24 AM PLOTTED BY: VICTOR
THIS DOCUMENT, AND THE IDEAS AND DESIGNS INCORPORATED HEREIN, AS AN INSTRUMENT OF PROFESSIONAL SERVICE, IS THE PROPERTY OF INTERPLAN PLLC. ALL REPRODUCTIONS, INCLUDING COPIES BY ANY METHOD OR DEVICE, MUST BEAR THE COPYRIGHT NOTICE OF INTERPLAN PLLC. THIS DOCUMENT MAY NOT BE USED FOR ANY PURPOSE NOT SPECIFICALLY AUTHORIZED IN WRITING BY INTERPLAN PLLC.

STRUCTURAL NOTES

CODES AND STANDARDS

1. WIND LOADS AS PER:
   - A. FLORIDA BUILDING CODE 2017 EDITION, FOR A 140 MPH(ULT)/108 MPH(ASD) EXPOSURE C, +/-0.18 INTERNAL PRESSURE COEFFICIENT, 1.0 IMPORTANCE FACTOR, AND RISK CATEGORY II.
   - B. THIS BUILDING IS DESIGNED AS AN ENCLOSED BUILDING.
2. THE PROJECT WAS DESIGNED IN ACCORDANCE WITH THE:
   - A. FLORIDA BUILDING CODE 2017 EDITION.
   - B. BUILDING CODE REQUIREMENTS FOR REINFORCED CONCRETE (ACI 318/ 2014 EDITION).
   - C. MANUAL OF STANDARD PRACTICE FOR DETAILING REINFORCED CONCRETE STRUCTURES (ACI 315/ LATEST EDITION).
   - D. MANUAL OF STANDARD PRACTICE FOR WELDING REINFORCING STEEL, INSERTS & CONNECTIONS IN REINFORCED CONCRETE CONSTRUCTION. AWS. D1.4/ 1992 EDITION.
   - D. SPECIFICATION FOR THE DESIGN, FABRICATION & ERECTION OF STRUCTURAL STEEL FOR BUILDINGS. (AMERICAN INSTITUTE OF STEEL CONSTRUCTION) AISC ASD/ 9TH EDITION OR LRFD 3RD EDITION.
3. ARCHITECTURAL AND MECHANICAL DRAWINGS:
   - A. THE STRUCTURAL DRAWINGS ARE PART OF THE CONTRACT DOCUMENTS AND DO NOT BY THEMSELVES PROVIDE ALL THE INFORMATION REQUIRED TO PROPERLY COMPLETE THE PROJECT STRUCTURE. THE GENERAL CONTRACTOR SHALL CONSULT THE ARCHITECTURAL, MECHANICAL AND ELECTRICAL DRAWINGS AND COORDINATE THE INFORMATION CONTAINED IN THESE DRAWINGS WITH THE STRUCTURAL DRAWINGS TO PROPERLY CONSTRUCT THE PROJECT.
   - B. REFER TO ARCHITECTURAL, MECHANICAL OR ELECTRICAL DRAWINGS FOR ADDITIONAL OPENINGS, DEPRESSIONS, FINISHES, INSERTS, BOLTS SETTINGS, DRAINS, REGLETS, ETC.
   - C. BEFORE ORDERING ANY MATERIALS OR DOING ANY WORK, THE CONTRACTOR SHALL VERIFY ALL MEASUREMENTS TO PROPERLY SIZE OR FIT THE WORK. NO EXTRA CHARGE OR COMPENSATION WILL BE ALLOWED BY THE OWNER RESULTING FROM THE CONTRACTOR'S FAILURE TO COMPLY WITH THIS REQUIREMENT.
   - D. DISCREPANCIES SHALL BE BROUGHT TO THE ATTENTION OF THE ARCHITECT AND ENGINEER BEFORE PROCEEDING WITH ANY WORK.
   - E. ALL STRUCTURES HAVE BEEN DESIGNED TO RESIST THE DESIGN LOADS LISTED ONLY AS COMPLETED STRUCTURES. THE GENERAL CONTRACTOR SHALL FULLY BRACE AND OTHERWISE PROTECT WORK IN PROGRESS UNTIL THE STRUCTURES ARE COMPLETED. THE GENERAL CONTRACTOR SHALL ALSO INSURE THAT ITS OPERATIONS AND PROCEDURES PROVIDE NO LOADING GREATER THAN THE DESIGN LOADS LISTED ON ANY MEMBER.
4. SECTIONS AND DETAILS:
   ALL DETAILS, SECTIONS AND NOTES SHOWN ON THE DRAWINGS ARE INTENDED TO BE TYPICAL AND SHALL APPLY TO SIMILAR SITUATIONS ELSEWHERE UNLESS OTHERWISE SHOWN.

SPECIALTY ENGINEERED PRODUCTS

1. THE GENERAL CONTRACTOR IS RESPONSIBLE TO COORDINATE THE PROPER SUBMISSION OF SPECIALTY ENGINEERED SHOP DRAWINGS WHICH SHALL BE SIGNED AND SEALED BY AN ENGINEER REGISTERED IN THE STATE OF FLORIDA. IT IS THE GENERAL CONTRACTOR'S RESPONSIBILITY TO ASSURE THAT THE SPECIALTY ENGINEERED SHOP DRAWINGS ARE SUBMITTED IN A TIMELY MANNER SO AS TO ALLOW REVIEWS AND RESUBMISSIONS AS REQUIRED. ALL SPECIALTY ENGINEERED PRODUCTS SHALL BE DESIGNED FOR THE APPROPRIATE GRAVITY LOADS AND WIND LOADS INCLUDING UPLIFT AND LATERAL LOADS. INTERIOR SPECIALTY PRODUCTS SHALL BE DESIGNED FOR LATERAL LOADS TO ASSURE STABILITY. SPECIALTY ENGINEERED PRODUCTS SHALL BE, BUT ARE NOT LIMITED TO, THE FOLLOWING:
   - A. LIGHT GAUGE METAL INCLUDING, BUT NOT LIMITED TO, SOFFITS, CLADDING, CEILINGS, ETC.
   - B. MISCELLANEOUS METALS INCLUDING STEEL STAIRS, MECHANICAL EQUIPMENT SUPPORTS, FRAMES THAT SUPPORT MACHINES, PIPES OR OTHER STRUCTURAL METAL USED FOR SUPPORT OF MECHANICAL SYSTEMS.
   - C. MISCELLANEOUS HANGERS, METAL FRAMES, LADDERS, RIGGING, HANGING WALLS, METAL RAILINGS, SAFETY RAILINGS, GLAZING FRAMES, CLADDING SUCH AS STONE, PRECAST, ALUMINUM, METAL PANELS, CABLE BARRIER SYSTEMS, ETC. OR ANY OTHER MISCELLANEOUS PRODUCT REQUIRED BY ANY OF THE CONSTRUCTION DOCUMENTS.

FOUNDATION

1. ALL SITE PREPARATION AND EXCAVATION WORK IS TO BE PERFORMED IN STRICT ACCORDANCE WITH THE:
   - A. GEOTECHNICAL REPORT PREPARED BY UNIVERSAL ENGINEERING SCIENCES, INC DATED OCTOBER 2, 2017, REPORT NUMBER 1494195.
2. THE BUILDING SITE SHOULD BE EXCAVATED TO THE DEPTH AND EXTENT INDICATED IN THE SOILS REPORT. ALL SUBGRADES SHALL BE APPROVED IN WRITING BY THE SOILS ENGINEER PRIOR TO BACKFILLING.
3. BOTTOM OF FOOTINGS TO BEAR ON SOIL CAPABLE OF SAFELY SUPPORTING 2000 PSF.
4. BOTTOM OF ALL FOOTINGS SHALL BE MINIMUM 12" BELOW EXTERIOR FINISH GRADE.
5. EXCAVATION & BACKFILL:
   - A. ALL EXCAVATION SHALL BE KEPT DRY. EXCAVATE TO DEPTHS AND DIMENSIONS INDICATED. TAKE EVERY PRECAUTION TO GUARD AGAINST ANY MOVEMENT OR SETTLEMENT OF ADJACENT STRUCTURES, UTILITIES, PIPING, ETC.
   - B. PROVIDE ANY BRACING OR SHORING NECESSARY TO AVOID SETTLEMENT OR DISPLACEMENT OF EXISTING FOUNDATION OR STRUCTURES.
6. CENTERLINE OF FOOTINGS: SHALL COINCIDE WITH CENTERLINE OF COLUMNS UNLESS OTHERWISE NOTED ON DRAWINGS.
7. DIMENSIONS: ALL DIMENSIONS AND ELEVATIONS SHOWN ON THE STRUCTURAL DRAWINGS MUST BE VERIFIED AND COORDINATED WITH THE ARCHITECTURAL DRAWINGS BY THE CONTRACTOR BEFORE PROCEEDING WITH THE CONSTRUCTION. DISCREPANCIES SHALL BE BROUGHT TO THE ATTENTION OF THE ARCHITECT OR ENGINEER IN WRITING BEFORE PROCEEDING WITH ANY WORK.

CONCRETE

1. CONCRETE ELEMENTS TO HAVE THE FOLLOWING STRENGTHS:
   - A. FOUNDATIONS 3000 PSI
   - B. SLAB-ON-GRADE 3000 PSI
   - ALL OTHER CONCRETE TO BE 3000 PSI UNLESS NOTED OTHERWISE.
2. ALL CONCRETE SHALL BE READY MIX AND MEET THE FOLLOWING REQUIREMENTS:
   - A. A MINIMUM COMPRESSIVE STRENGTH OF 3000 PSI @ 28 DAYS.
   - B. SLUMPS SHALL BE 4" MINIMUM AND 6" MAXIMUM.
   - C. CONCRETE SHALL HAVE 2 PERCENT AIR ENTRAINMENT.
   - D. ALL CONCRETE TO HAVE MAXIMUM WATER/CEMENT RATIO OF 0.55.
   - E. JOBSITE WATER SHALL NOT BE ADDED.
3. ALL CONCRETE WORK SHALL COMPLY WITH THE REQUIREMENTS OF THE ACI BUILDING CODE (ACI 318/ 2014 EDITION), THE ACI DETAILING MANUAL (ACI 315/ LATEST EDITION), AND THE SPECIFICATIONS FOR STRUCTURAL CONCRETE FOR BUILDINGS (ACI 301/ LATEST EDITION).
4. SUBMIT ALL REINFORCING STEEL SHOP DRAWINGS FOR APPROVAL PRIOR TO ANY FABRICATION.
5. CONCRETE COVER FOR REINFORCING STEEL SHALL BE AS REQUIRED BY ACI SPECIFICATIONS.
6. WELDED WIRE FABRIC SHALL COMPLY WITH ASTM A 185, UNLESS OTHERWISE SPECIFIED. PLACE FABRIC 2" CLEAR FROM TOP OF THE SLAB IN SLAB ON GRADE AND SUPPORT ON SLAB BOLSTERS SPACED AT 3'-0" O.C.
7. REQUIREMENTS:
   - A. ALL REINFORCING STEEL SHALL BE MANUFACTURED FROM HIGH STRENGTH BILLET STEEL CONFORMING TO ASTM DESIGNATION A 615 GRADE 60.
   - B. WWF SHALL COMPLY WITH ASTM A 185.
8. LAP ALL BARS MINIMUM 48 DIAMETERS UNLESS OTHERWISE NOTED ON DRAWINGS. LAP ALL WWF A MINIMUM OF 12 INCHES (UNLESS OTHERWISE NOTED).
9. REINFORCING BARS:
   - A. ALL HOOKS SHOWN IN REINFORCEMENT SHALL BE ACI RECOMMENDED HOOKS UNLESS OTHERWISE NOTED.
10. CONSTRUCTION JOINTS IN STRUCTURAL SLABS AND BEAMS SHALL BE AT MID-SPAN AND KEY JOINTED WITH REINFORCING CONTINUOUS ACROSS JOINT AND ADDITIONAL SHEAR FRICTION REINFORCING. CONSTRUCTION JOINT LOCATIONS SHALL BE SUBMITTED FOR REVIEW AND APPROVAL PRIOR TO CONSTRUCTION. CONSTRUCTION JOINTS IN POST-TENSION SLABS SHALL BE LOCATED AND DESIGNED BY SPECIALTY ENGINEER.
11. ALL MECHANICAL COUPLERS SHALL DEVELOP 1.25 FY OF REBAR IN TENSION OR COMPORESSION AND COMPLY WITH ACI 318.

STEEL

1. ALL STRUCTURAL STEEL SHALL BE FABRICATED AND ERECTED IN ACCORDANCE WITH THE LATEST AISC CODE. STRUCTURAL STEEL SHALL CONFORM TO:
   - A. ASTM SPECIFICATION A 992 GRADE 50 FOR ALL WIDE FLANGE BEAMS.
   - B. ASTM SPECIFICATION A 36 FOR MISCELLANEOUS STEEL SHAPES (ANGLES, PLATES, ETC.).
   - C. SQUARE OR RECTANGULAR HSS SHALL CONFORM TO ASTM SPECIFICATION A 500 GRADE B (FY=46 KSI).
   - D. ALL STEEL TO HAVE A SHOP COAT OF RUST INHIBITIVE PAINT.
   - E. DELETE PAINT ON ALL STEEL TO RECEIVE SPRAYED ON FIREPROOFING OR CONCRETE ENCASEMENT.
   - F. ALL MILL CAMBER TO BE ORIENTED UPWARD DURING FABRICATION AND ERECTION.
   - G. STEEL BEAMS INSTALLED IN PARALLEL WITH STEEL BAR JOISTS MUST HAVE CAMBER EQUAL TO BAR JOISTS.
2. ALL SHOP AND FIELD WELDING SHALL BE PERFORMED BY WELDERS QUALIFIED, AS DESCRIBED IN "AMERICAN WELDING SOCIETY'S STANDARD QUALIFICATION PROCEDURE" (AWS D1.1), TO PERFORM THE TYPE OF WORK REQUIRED.
3. ALL CONNECTIONS SHALL BE BOLTED WITH 3/4" DIAMETER, A-325 HIGH STRENGTH BOLTS OR WELDED (UNLESS SHOWN OTHERWISE ON THE DRAWINGS).
   - A. ALL CONNECTIONS TO HOLLOW STRUCTURAL SECTION (HSS) COLUMNS ARE TO BE THRU-PLATE UNLESS NOTED OTHERWISE.
   - B. ALL CONNECTIONS SHALL BE DOUBLE ANGLES UNLESS NOTED OTHERWISE.
4. ALL ALUMINUM AND STEEL MEMBERS TO BE TREATED OR PROPERLY SEPARATED TO PREVENT GALVANIC AND CORROSIVE EFFECTS.
5. ALL STEEL WELDING RODS SHALL BE E70XX ELECTRODES.
6. SUBMIT ALL STEEL SHOP DRAWINGS FOR APPROVAL PRIOR TO ANY FABRICATION.
7. EQUIPMENT SUPPORTS:
   PROVIDE ALL SUPPORTING STEEL NOT INDICATED ON PLAN AS REQUIRED FOR THE INSTALLATION OF MECHANICAL EQUIPMENT AND MATERIALS, INCLUDING ANGLES, CHANNELS, BEAMS, HANGERS, ETC. DO NOT SUPPORT EQUIPMENT OR PIPING FROM METAL DECKING.
8. DECK SUPPORTS:
   PROVIDE 1/4" BENT PLATES AT ALL HIPS, VALLEYS, SKEWED BEAMS AND OTHER AREAS FOR DECK SUPPORT.

PRE-ENGINEERED BUILDING NOTES

1. THE ENTIRE PRE-ENGINEERED METAL BUILDING SYSTEM SHALL BE DESIGNED BY THE PRE-ENGINEER BUILDING MANUFACTURER IN CONFORMANCE WITH THE REFERENCED BUILDING CODES AND STANDARDS.
2. IT IS THE PRE-ENGINEERED BUILDING MANUFACTURER'S RESPONSIBILITY TO DESIGN THE COMPLETE BUILDING SYSTEM (STEEL FRAMING, ANCHOR BOLTS, PURLINS, GIRTS, BRACING, CONNECTIONS, ROOFING, WALL PANELS, COMPONENTS, ATTACHMENTS, ETC.). THE MANUFACTURER SHALL SUBMIT A CERTIFICATION LETTER BEARING THE SEAL OF THE REGISTERED PROFESSIONAL STRUCTURAL ENGINEER RESPONSIBLE FOR THE DESIGN STATING THAT THE BUILDING SYSTEM DESIGN MEETS THE INDICATED CODE, PERFORMANCE AND LOADING REQUIREMENTS.
3. THE CONTRACTOR SHALL SUBMIT SHOP DRAWINGS OF THE ENTIRE METAL BUILDING SYSTEM FOR REVIEW. THE CONTRACTOR SHALL ALSO SUBMIT A COMPLETE STRUCTURAL DESIGN ANALYSIS OF THE BUILDING SYSTEM (FOR RECORD PURPOSES ONLY). THE SHOP DRAWING SUBMITTAL SHALL INCLUDE ALL ANCHOR BOLT REQUIREMENTS AND FOUNDATION REACTIONS. ALL SHOP DRAWING AND CALCULATION SUBMITTALS SHALL BEAR THE SEAL OF THE REGISTERED PROFESSIONAL STRUCTURAL ENGINEER RESPONSIBLE FOR THE DESIGN.
4. DESIGN LOADS TO BE USED IN CONNECTION WITH THE PRE-ENGINEERED BUILDING DESIGN ARE PER THE DESIGN CRITERIA NOTES. IN ADDITION TO THE ACTUAL DEAD LOAD, AN ADDITIONAL COLLATERAL ROOF FRAMING DEAD LOAD OF 5 PSF SHALL BE INCLUDED. COORDINATE ANY EQUIPMENT LOADS WITH THE MECHANICAL AND ARCHITECTURAL DRAWINGS.
5. CALCULATIONS FOR FRAME DEFLECTIONS SHALL BE DONE USING ONLY THE STIFFNESS OF THE BARE FRAMES. REDUCTIONS BASED ON ENGINEERING JUDGEMENT USING THE ASSUMED COMPOSITE STIFFNESS OF THE BUILDING ENVELOPE SHALL NOT BE PERMITTED. CALCULATIONS SHALL BE SUBMITTED VERIFYING THAT THE ACTUAL FRAME DRIFTS UNDER CODE REQUIRED LOADINGS DOES NOT EXCEED THE ALLOWABLE DEFLECTIONS AND DRIFTS AS INDICATED IN THE PROJECT SPECIFICATIONS.
6. THE PRE-ENGINEERED BUILDING MANUFACTURER SHALL PROVIDE ALL GIRTS, PURLINS, AND OTHER COMPONENTS REQUIRED FOR A COMPLETE BUILDING SYSTEM. ALL WALL SYSTEMS, SUCH AS METAL STUDS, STOREFRONTS, ETC., SHALL BE PROPERLY SUPPORTED BY THE METAL BUILDING SYSTEM. ALLOWABLE DEFLECTIONS OF COMPONENTS SHALL BE IN ACCORDANCE WITH THE PROJECT SPECIFICATIONS.
7. THE FOUNDATION SYSTEM IS BASED UPON THE DESIGN LOADS INDICATED IN THE DESIGN CRITERIA AND THE UNFACTORED REACTIONS INDICATED. IF THE ACTUAL FOUNDATION REACTIONS ARE MORE THAN 5% GREATER THAN THE REACTIONS INDICATED, THEN THE PROJECT STRUCTURAL ENGINEER OF RECORD SHALL BE NOTIFIED.
8. THE SIZE, NUMBER AND PLACEMENT PATTERN OF ALL ANCHOR BOLTS SHALL BE DETERMINED BY THE PRE-ENGINEERED BUILDING MANUFACTURER. ANCHOR BOLT EMBEDMENTS ARE INDICATED ON THE PROJECT DRAWINGS.
9. THE PRE-ENGINEERED BUILDING SHALL BE DESIGNED BY THE MANUFACTURER TO RESIST ALL CODE REQUIRED LATERAL LOADS AS FOLLOWS:
   INTERIOR FRAME LINES: RIGID FRAMES (PINNED-BASED COLUMNS)
   PERIMETER WALL LINES: BRACED BAYS OR PORTAL FRAMES
10. TEMPORARY GUYING AND BRACING SHALL BE PROVIDED UNTIL THE ENTIRE FINAL LATERAL LOAD RESISTING SYSTEM HAS BEEN ERECTED. SEE THE GENERAL REQUIREMENTS.
11. UNLESS OTHERWISE NOTED OR SPECIFIED, ALL STEEL MEMBERS SHALL BE CLEANED AND PAINTED IN ACCORDANCE WITH THE MANUFACTURER'S STANDARD PROCEDURES.
12. THE REACTIONS USED FOR THE DESIGN OF THE FOUNDATION SYSTEM WERE BASED ON PINNED COLUMN BASES. NO FIXED COLUMN BASES ARE PERMITTED WITHOUT THE STRUCTURAL ENGINEER OF RECORD'S WRITTEN APPROVAL.
13. THE FOUNDATIONS HAVE BEEN DESIGNED FOR THE FOLLOWING UNFACTORED REACTIONS.
    MAIN BUILDING:

TYPICAL INTERIOR FRAME:	25K (DOWN)	17K (UP)	14K (HORIZ)
TYPICAL END FRAME:	25K (DOWN)	25K (UP)	20K (HORIZ)
TYPICAL ENDWALL COLUMN:	8K (DOWN)	5K (UP)	5K (HORIZ)
TYPICAL INTERIOR COLUMN:	50K (DOWN)	25K (UP)	

COLD FORMED METAL FRAMING:

1. DESIGN, FABRICATIONS AND ERECTION SHALL CONFORM TO AISI "SPECIFICATIONS FOR THE DESIGN OF COLD FORMED STEEL STRUCTURAL MEMBERS", LATEST EDITION. ALL METAL STUDS SHALL BE GALVANIZED.
2. ALL 43 MIL AND 33 MIL STUDS, JOISTS, TRACK, BRIDGING, END CLOSURES AND ACCESSORIES SHALL BE FORMED FROM STEEL THAT CORRESPONDS TO THE REQUIREMENTS OF AISI "SPECIFICATION FOR THE DESIGN OF COLD FORMED STEEL STRUCTURAL MEMBERS" WITH A MINIMUM YIELD OF 33,000 PSI (U.N.O.).
3. ALL MATERIAL AND ACCESSORIES SHALL BE FORMED FROM STEEL HAVING A G-60 GALVANIZED COATING, MEETING ASTM A 653.
4. UNLESS NOTED, ALL SCREWS OR PINS SHALL BE NON CORROSIVE NO. 8-18 (D=.125") OR LARGER (DO NOT USE STAINLESS STEEL OR COPPER COATED FASTENERS).
5. UNLESS NOTED, TRACKS SHALL BE SAME DEPTH AS STUDS OR JOISTS AND EQUAL OR THICKER GAUGE THAN STUDS OR JOISTS. TRACKS SHALL BE CONNECTED TO SUPPORTS AT 16" MAX. STUDS OR JOISTS SHALL BE CONNECTED TO TRACKS AT EACH SIDE.

SHOP DRAWINGS

1. THE SHOP DRAWINGS SHALL BE SUBMITTED IN COMPLETE PACKAGES FOR THE FOLLOWING:
   - A. CONCRETE MIX DESIGNS
   - B. CONCRETE REINFORCING STEEL AND WELDED WIRE FABRIC
   - C. PRE-ENGINEERED METAL BUILDINGS
2. PRE-ENGINEERED ITEMS SHALL BE SUBMITTED SIGNED AND SEALED BY A SPECIALTY ENGINEER REGISTERED IN THE STATE OF FLORIDA.

DESIGN LOAD SCHEDULE

(ALL LOADS SHOWN ARE IN POUNDS PER SQ. FT.)

COMPONENT \ AREA	ROOF								
SYSTEM	20								
TOTAL DEAD LOAD	20								
TOTAL LIVE LOAD	20								
TOTAL LOAD	40								

ROOF WIND PRESSURE (PSF)

COMPONENTS AND CLADDING-EXP C-108 MPH(ASD) WIND SPEED

EFFECTIVE WIND AREA (SQ. FT.)	ROOF AREA 1	ROOF AREA 2	ROOF AREA 3
10	+12.9/-28.1	+12.9/-47.1	+12.9/-71.0
20	+12.9/-27.3	+12.9/-42.1	+12.9/-58.7
50	+12.9/-26.4	+12.9/-35.5	+12.9/-42.7
100	+12.9/-25.7	+12.9/-30.4	+12.9/-30.4

NOTES:

1. WIND DESIGN PER FBC-2017
2. +: INDICATES WIND PRESSURE
   -: INDICATES WIND SUCTION
3. WALL DISTANCE A = 10 FT (COMPONENTS AND CLADDING)
4. FOR EFFECTIVE WIND AREAS BETWEEN THOSE GIVEN ABOVE THE LOAD MAY BE INTERPOLATED, OTHERWISE USE THE LOAD ASSOCIATED WITH THE LOWER EFFECTIVE WIND AREA
5. MULTIPLY VALUES WITH 1.67 FOR ULT.

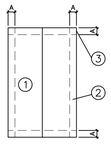

PLAN

DOOR & WINDOW WIND PRESSURE (PSF)

COMPONENTS AND CLADDING-EXP C-108 MPH(ASD) WIND SPEED

SIZE OF WALL OPENING (SQ. FT.)	WALL AREA 4	WALL AREA 5
10	+28.1/-30.4	+28.1/-37.5
20	+26.8/-29.2	+26.8/-35.1
50	+25.2/-27.5	+25.2/-31.7
100	+23.9/-26.3	+23.9/-29.2

NOTES:

1. WIND DESIGN PER FBC-2017
2. +: INDICATES WIND PRESSURE
   -: INDICATES WIND SUCTION
3. WALL DISTANCE A = 10 FT (COMPONENTS AND CLADDING)
4. FOR WALL OPENINGS BETWEEN THOSE GIVEN ABOVE THE LOAD MAY BE INTERPOLATED, OTHERWISE USE THE LOAD ASSOCIATED WITH THE LOWER WALL OPENING AREA.
5. MULTIPLY VALUES WITH 1.67 FOR ULT.

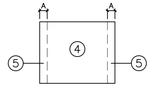

WALL ELEVATION

DENSGLASS SHEATHING FASTENING SCHEDULE

(WALLS AND ROOF)

SCREW SIZE	FASTENER SPACING	ZONE
#10 BUGLE HEAD	6" @ EDGES, 12" @ INTERMEDIATE SUPPORTS	ROOF
#10 BUGLE HEAD	6" @ EDGES, 12" @ INTERMEDIATE SUPPORTS	WALL

INTERPLAN LLC

ARCHITECTURE
ENGINEERING
INTERIOR DESIGN
PROJECT MANAGEMENT

AA 003420
CA 8660

604 COURTLAND STREET
SUITE 100
ORLANDO, FLORIDA 32804
PH 407.645.5008
FX 407.629.9124

SEAL:

THIS DOCUMENT IS NOT FOR REGULATORY APPROVAL, PERMITTING, OR CONSTRUCTION.

BJARNE MADSEN, P.E.
FL. 58683

dansk consulting inc.

1673 LAKE BALDWIN LANE
ORLANDO, FLORIDA 32814
PH. (407) 252-4225
LIC EB28029
PROJECT # IP18-22

NO	DATE	REMARKS

REVISIONS

SHELL BUILDING for DOLLAR TREE

N HWY 19 & CR 44
EUSTIS, FL

PROJECT NO: 2018.0328
DATE: 08-13-2018

S0.1

STRUCTURAL NOTES

CHECKED: BM DRAWN: RED

COPYRIGHT © 2018 INTERPLAN PLLC. FILE:S:\SERVER\CONFIGURATION\CAD\ACTIVE\2018\2018.0328 DOLLAR TREE\TEMPLATES\DOLLAR TREE - 2018.DWT

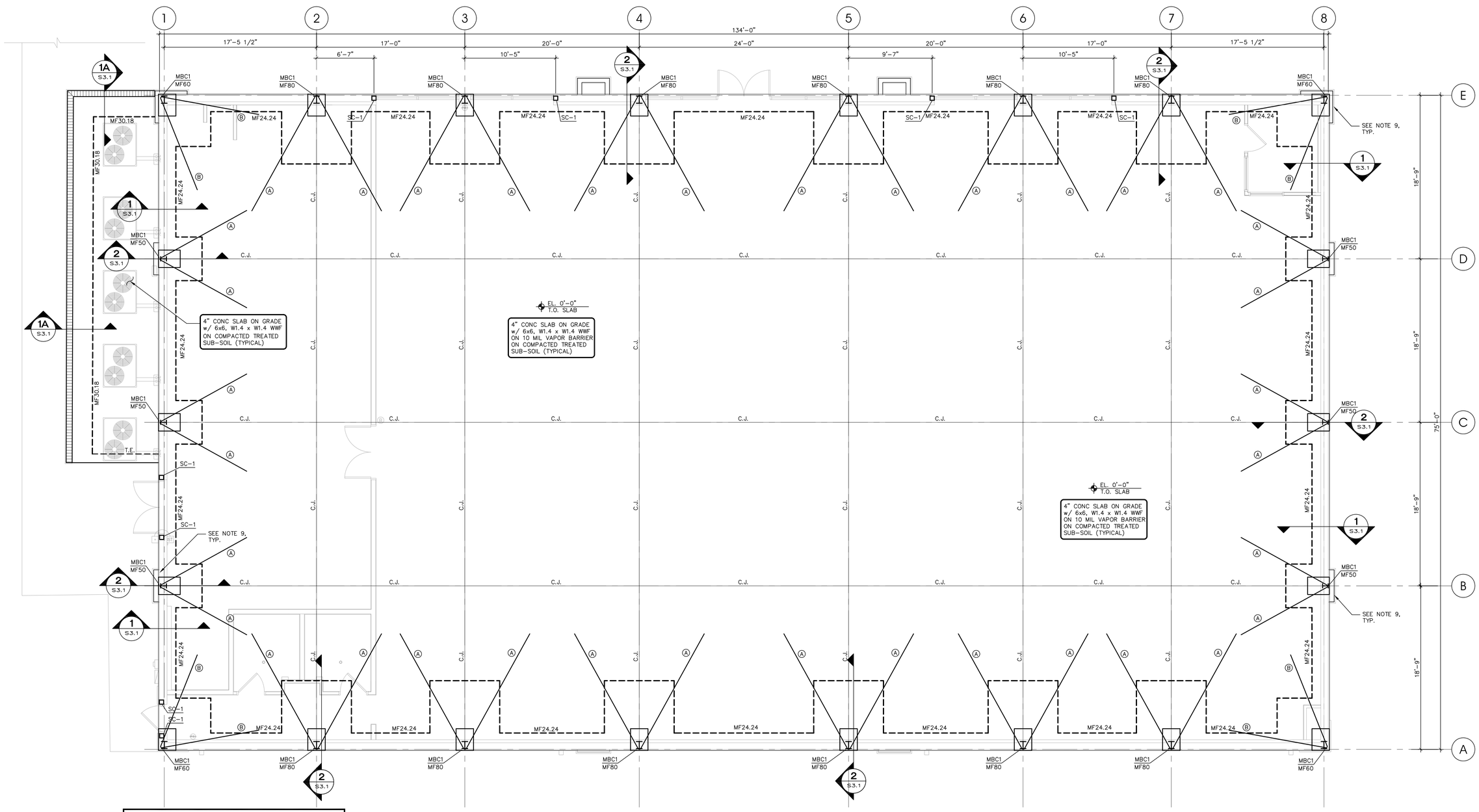

STEEL COLUMN SCHEDULE			
MARK	SIZE	BASE PL	ANCHOR BOLTS
SC-1	6x6x5/16	12x12x1	(4) 3/4"ø

PROVIDE 1/2 CAPPLATE AND WELD W/ 3/16 TO HSS GIRT.

FOOTING SCHEDULE		
MARK	DIMENSIONS	REINFORCEMENT
MF24.24	2'-0" X 24" X CONT. MONO	(3)#5 CONT. BOTTOM
MF30.18	3'-0" X 18" X CONT. MONO	(3)#5 CONT. BOTTOM
MF50	5'-0" X 5'-0" X 24"	(6) #6 E.W. BOTTOM
MF60	6'-0" X 6'-0" X 24"	(7) #6 E.W. BOTTOM
MF80	8'-0" X 8'-0" X 24"	(9) #6 E.W. BOTTOM

CONCRETE SLAB NOT TO HAVE A SLOPE OF MORE THAN ¼"PER FOOT IN TEN (10') FEET

MASONRY WALL SCHEDULE		
MARK	THICKNESS	REINFORCING
MW-1	8" CMU	#5 @ 48" O.C.(CENTERED)

MASONRY WALL NOTES:

1. WALL SEGMENTS SHALL BE REINFORCED WITH 9 GA. GALVANIZED LATERAL REINFORCING @ 16" O.C. HORIZ. EXTEND REINFORCING 6" INTO POURED ELEMENTS AND AROUND ENCASED STEEL.
2. ALL MASONRY REINFORCED CELLS SHALL BE FILLED WITH 3000 PSI GROUT MIX.

METAL BLDG. COLUMN REACTION SCHEDULE				
COLUMN MARK	ANCHOR BOLTS	Vdn (KIPS)	H (KIPS)	Vup (KIPS)
MBC1	SEE NOTE 1	25	20	25

NOTES:

1. SEE METAL BUILDING DRAWINGS FOR ANCHOR BOLT DIAMETERS AND ANCHOR BOLT PROJECTION LENGTH.
   A. 1" DIA. BOLTS SHALL HAVE 15" MIN. EMBED AND 3" HOOK.
   B. 3/4" DIA. BOLTS SHALL HAVE 12" MIN. EMBED AND 3" HOOK.
   C. 5/8" DIA. BOLTS SHALL HAVE 10" MIN. EMBED AND 3" HOOK.
   D. 1/2" DIA. BOLTS SHALL HAVE 8" MIN. EMBED AND 3" HOOK.
2. ANCHOR BOLTS SHALL BE A36 OR A307.
3. Vdn DENOTES DOWNWARD VERT. REACTION
   H DENOTES HORIZONTAL REACTION
   Vup DENOTES VERTICAL NET UPLIFT REACTION

FOUNDATION NOTES:

1. ELEV. ±0'-0" IS REFERENCE ONLY. SEE CIVIL FOR TRUE NGVD ELEVATION.
2. C.J. INDICATES CONTROL JOINT SEE S3.1 FOR DETAILS.
3. VERIFY SLOPES AND STEPS WITH ARCH'L PRIOR TO CONSTRUCTION. SEE TYPICAL STEP DETAIL ON S3.1.
5. MF-# INDICATES MONOLITHIC CONCRETE FOOTINGS, SEE SCHEDULE ON THIS SHEET.
6. MBC# DENOTES METAL BUILDING COLUMN BASE TYPE. SEE THIS SHEET FOR SCHEDULE INDICATING COLUMN ANCHOR BOLTS AND DESIGN REACTIONS.
7. (A) DENOTES (1) #5 X 15'-0" LG. HAIRPIN
   (B) DENOTES (1) #5 X 10'-0" LG. HAIRPIN
8. SC-# DENOTES STEEL COLUMN TYPE. SEE SCHEDULE ON THIS SHEET.
9. PROVIDE MINIMUM 8" THICK CONCRETE SLAB/FOOTING UNDER PILASTERS. PROVIDE #5 AT 12" O.C. E.W.
10. ▥ INDICATES FILLED CELL. ALL MASONRY WALLS ARE MW-1 U.N.O., SEE SCHEDULE ON THIS SHEET FOR SIZE AND SPACING OF REBAR.
11. ▼ INDICATES WALL CONTROL JOINT, SEE DETAIL ON S3.1.
12. T.E. DENOTES THICKENED EDGE, SEE DETAIL ON S3.1.

1 FOUNDATION PLAN 3/16"-1'-0"

NORTH

GENERAL CONTRACTOR NOTE :

DO NOT SCALE DRAWINGS !
COORDINATE DIMENSIONS BETWEEN STRUCTURAL AND ARCHITECTURAL DRAWINGS – NOTIFY STRUCTURAL ENGINEER AND ARCHITECT OF ANY DISCREPANCIES BEFORE PROCEEDING WITH WORK.

INTERPLAN PLLC

ARCHITECTURE
ENGINEERING
INTERIOR DESIGN
PROJECT MANAGEMENT

AA 003420
CA 8660

604 COURTLAND STREET
SUITE 100
ORLANDO, FLORIDA 32804
PH 407.645.5008
FX 407.629.9124

SEAL:

THIS DOCUMENT IS NOT FOR REGULATORY APPROVAL, PERMITTING, OR CONSTRUCTION.

BJARNE MADSEN, P.E.
FL. 58683

dansk consulting inc.

1673 LAKE BALDWIN LANE
ORLANDO, FLORIDA 32814
PH. (407) 252-4225
LIC EB28029
PROJECT # IP18-22

NO	DATE	REMARKS

REVISIONS

SHELL BUILDING for DOLLAR TREE

N HWY 19 & CR 44
EUSTIS, FL

PROJECT NO: 2018.0328
DATE: 08-13-2018

S1.1

FOUNDATION PLAN

CHECKED: BM DRAWN: RED

COPYRIGHT © 2018 INTERPLAN PLLC

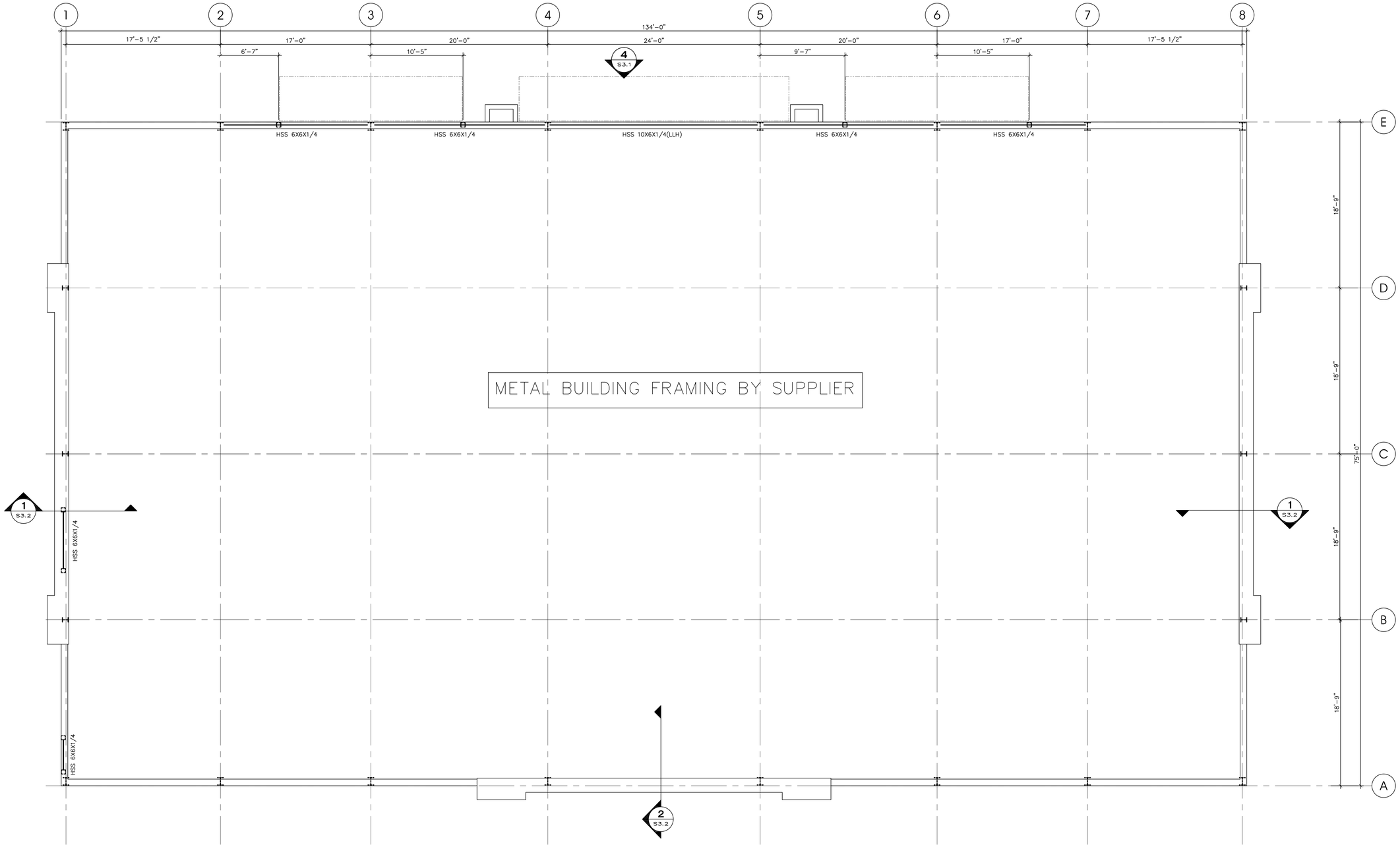

1 ROOF FRAMING PLAN 3/16"-1'-0"

NORTH

GENERAL CONTRACTOR NOTE :

DO NOT SCALE DRAWINGS !
COORDINATE DIMENSIONS BETWEEN STRUCTURAL AND ARCHITECTURAL DRAWINGS – NOTIFY STRUCTURAL ENGINEER AND ARCHITECT OF ANY DISCREPANCIES BEFORE PROCEEDING WITH WORK.

EXTERIOR CEILING & SOFFIT FRAMING NOTES:

1. REFER TO ARCH'L DWG'S FOR LOCATIONS, HEIGHT, AND PROFILE OF THE CEILING SOFFITS.
2. PROVIDE FRAMING AND BRIDGING AS NEEDED BUT NOT LESS THAN 4"–20GA. @ 16"o.c.
3. REFER TO ARCH'L FOR FINISHES AND FOR WIND SUCTION & PRESSURES AS PER APPLICABLE CODE BUT NOT LESS THAN 40 PSF.
4. SUBMIT SIGNED AND SEALED SHOP DWG'S AND CALCULATIONS PRIOR TO CONSTRUCTION.

INTERPLAN PLLC

ARCHITECTURE
ENGINEERING
INTERIOR DESIGN
PROJECT MANAGEMENT

AA 003420
CA 8660

604 COURTLAND STREET
SUITE 100
ORLANDO, FLORIDA 32804
PH 407.645.5008
FX 407.629.9124

SEAL:

THIS DOCUMENT IS NOT FOR REGULATORY APPROVAL, PERMITTING, OR CONSTRUCTION.

BJARNE MADSEN, P.E.
FL. 58683

dansk consulting inc.

1673 LAKE BALDWIN LANE
ORLANDO, FLORIDA 32814
PH. (407) 252-4225
LIC EB28029
PROJECT # IP18-22

NO	DATE	REMARKS

REVISIONS

SHELL BUILDING for DOLLAR TREE

N HWY 19 & CR 44
EUSTIS, FL

PROJECT NO: 2018.0328
DATE: 08-13-2018

S2.1

ROOF FRAMING PLAN

CHECKED: BM DRAWN: RED

COPYRIGHT © 2018 INTERPLAN PLLC RESERVED COPYRIGHT IN OUR OFFICE INSTRUMENTS AND DRAWINGS AS DOCUMENTS FOR THE SERVICES PERFORMED BY US. REPRODUCTION, ADDITIONS AND/OR ALTERATIONS ARE NOT PERMITTED.

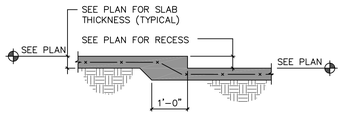

TYPICAL SLAB RECESS
N.T.S.

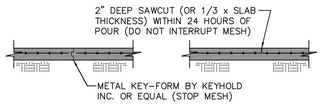

TYPICAL SLAB-ON-GRADE
N.T.S.

NOTE: CONTROL JOINTS/CONSTRUCTION JOINTS SHALL CREATE PANELS OF 400 SQ. FEET (MAXIMUM)

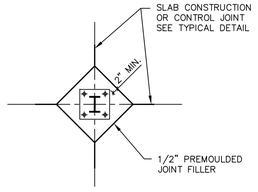

AT STEEL COLUMN

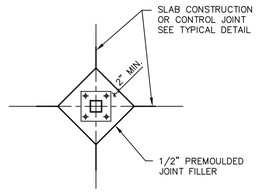

AT STEEL TUBE COLUMN

TYPICAL ISOLATION JOINTS AT COLUMNS
N.T.S.

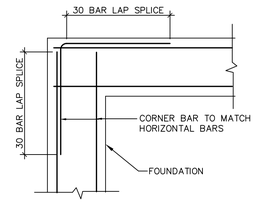

TYPICAL CORNER BAR DETAILS
N.T.S.

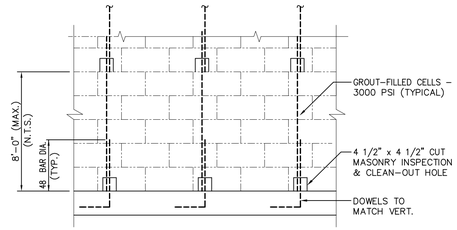

TYPICAL MASONRY FILLED CELL DETAIL
N.T.S.

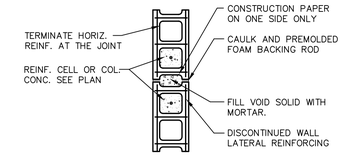

PLAN VIEW

NOTES :

1.- SAW CUT BOND BEAMS, TIE BEAMS 1" DEEP TO CONTINUE WALL CONTROL JOINT TO TOP OF WALL.

2.- CONTROL JOINT SPACING IS NOT TO EXCEED 25'-0"o.c. IN WALLS WITH MORE THAN 25'-0" OF UNINTERRUPTED MASONRY. REFER TO DWG'S. FOR ADDITIONAL SPECIFIED LOCATIONS AS NOTED THUS (WCJ).

3.- CONTINUE ALL BOND BEAMS, TIE BEAMS REINF. THROUGH THE JOINT.

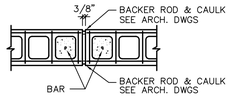

ALTERNATE METHOD

CMU WALL CONTROL JOINT (WCJ) DETAIL
N.T.S.

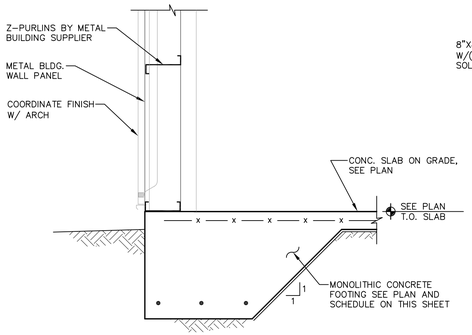

SECTION 1 S3.1
3/4" = 1'-0"

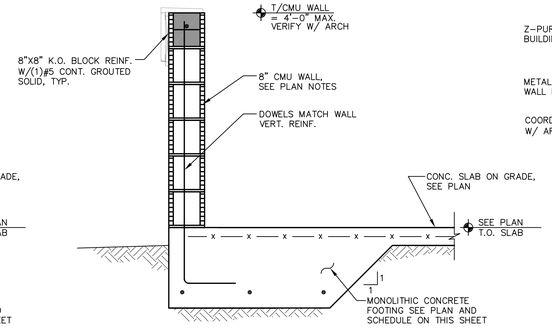

SECTION 1A S3.1
3/4" = 1'-0"

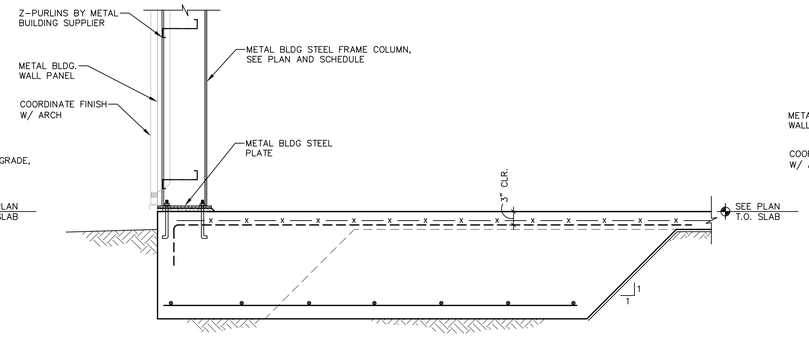

SECTION 2 S3.1
3/4" = 1'-0"

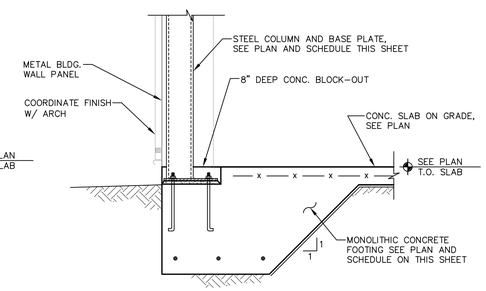

SECTION 3 S3.1
3/4" = 1'-0"

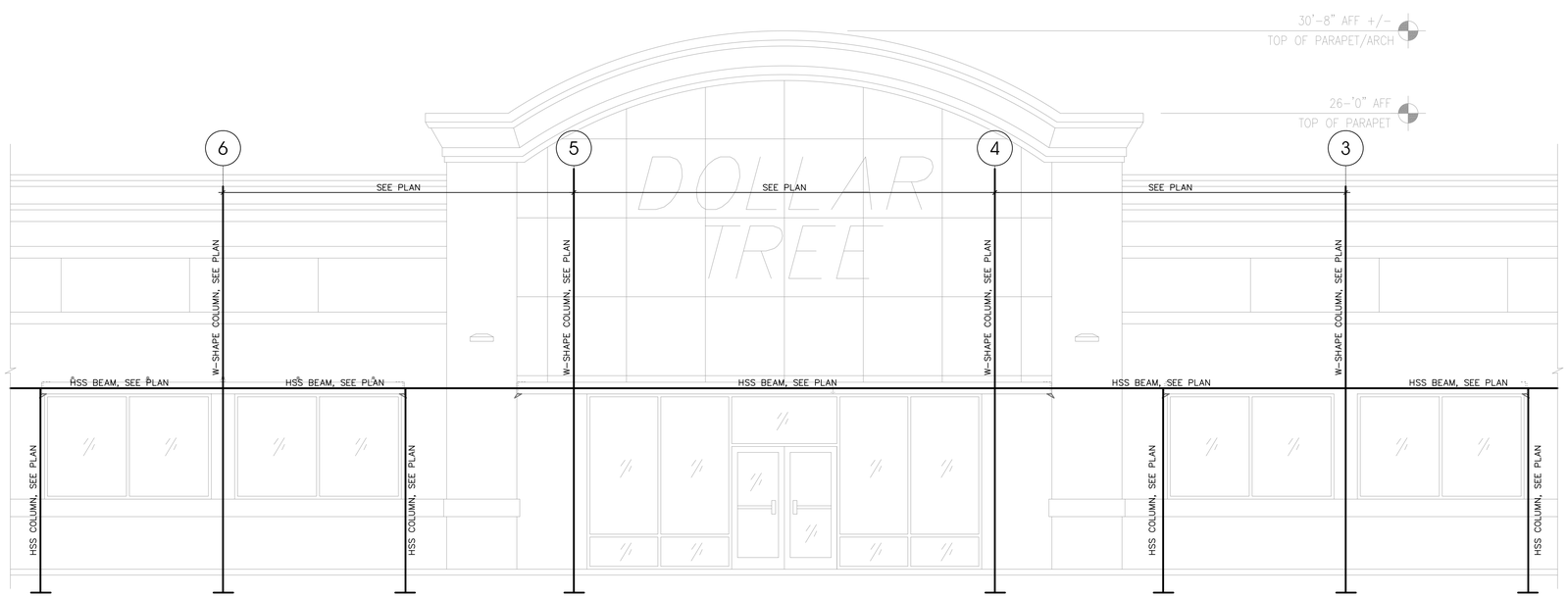

ELEVATION AT GRID E 5 S3.1
1/4"=1'-0"

INTERPLAN PLC
ARCHITECTURE
ENGINEERING
INTERIOR DESIGN
PROJECT MANAGEMENT

AA 003420
CA 8660

604 COURTLAND STREET
SUITE 100
ORLANDO, FLORIDA 32804
PH 407.645.5008
FX 407.629.9124

SEAL:

THIS DOCUMENT IS NOT FOR REGULATORY APPROVAL, PERMITTING, OR CONSTRUCTION.

BJARNE MADSEN, P.E.
FL. 58683

dansk consulting inc.

1673 LAKE BALDWIN LANE
ORLANDO, FLORIDA 32814
PH. (407) 252-4225
LIC EB28029
PROJECT # IP18-22

NO	DATE	REMARKS

REVISIONS

SHELL BUILDING for DOLLAR TREE

N HWY 19 & CR 44
EUSTIS, FL

PROJECT NO: 2018.0328
DATE: 08-13-2018

S3.1

DETAILS AND SCHEDULES

CHECKED: BM DRAWN: RED

COPYRIGHT © 2018 INTERPLAN PLC. RESERVED COPYRIGHT PLAN OF REPRESENTATIONS REPRESENTATIONS OR DESCRIPTIONS ARE NOT PERMITTED.

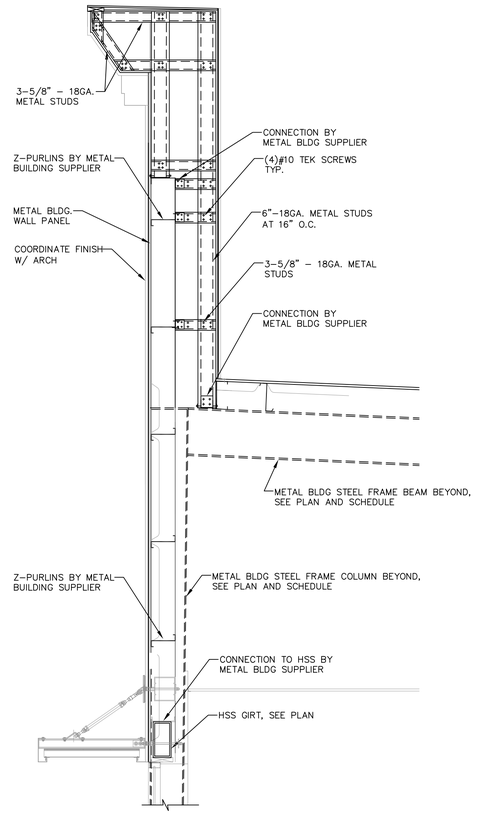

SECTION 1 / S3.2
1/2" = 1'-0"

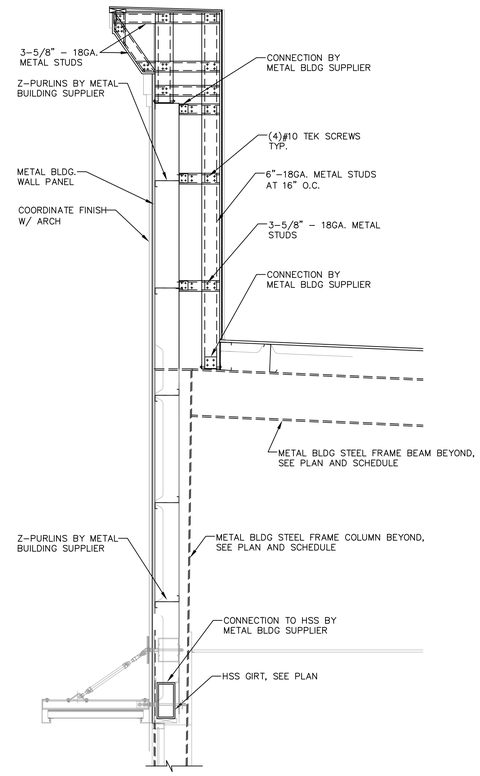

SECTION 2 / S3.2
1/2" = 1'-0"

INTERPLAN PLC

ARCHITECTURE
ENGINEERING
INTERIOR DESIGN
PROJECT MANAGEMENT

AA 003420
CA 8660

604 COURTLAND STREET
SUITE 100
ORLANDO, FLORIDA 32804
PH 407.645.5008
FX 407.629.9124

SEAL:

THIS DOCUMENT IS NOT FOR REGULATORY APPROVAL, PERMITTING, OR CONSTRUCTION.

BJARNE MADSEN, P.E.
FL. 58683

dansk consulting inc.

1673 LAKE BALDWIN LANE
ORLANDO, FLORIDA 32814
PH. (407) 252-4225
LIC EB28029
PROJECT # IP18-22

NO DATE REMARKS
REVISIONS

SHELL BUILDING for DOLLAR TREE

N HWY 19 & CR 44
EUSTIS, FL

PROJECT NO: 2018.0328
DATE: 08-13-2018

S3.2

DETAILS AND SCHEDULES

CHECKED: BM DRAWN: RED

COPYRIGHT © 2018 INTERPLAN PLLC FILE:S:\PROJECTS\2018\2018.0328 DOLLAR TREE EUSTIS\DRAWINGS\S3.2 DETAILS AND SCHEDULES.DWG PLOTTED BY:RAMON RED LAST SAVED BY:RED

SECTION 15500 - HEATING, VENTILATION AND AIR CONDITIONING

GENERAL

1. DESCRIPTION OF THE WORK:

A. THE EXTENT OF THE MECHANICAL WORK IS INDICATED ON THE DRAWINGS OR IN THE BID MANUAL.

B. RELATED WORK NOT INCLUDED IN THIS SECTION: TEST AND BALANCE, ELECTRICAL WIRING, CONTROL WIRING, ETC., EXCEPT CONTROL WIRING AS SPECIFICALLY DEFINED ABOVE. CONTRACTOR SHALL BE RESPONSIBLE FOR SUPERVISION OF ALL WIRING OF EQUIPMENT AND SHALL FURNISH ALL NECESSARYDIAGRAMS, INCLUDING CONTROL WIRING DIAGRAMS.MOUNT ALL CONTROL DEVICES.

2. SUBMITTALS

A. MAINTENANCE MANUALS AND INSTRUCTIONS: FURNISH THREE (3) SETS OF COMPLETE OPERATING INSTRUCTIONS COVERING ENTIRE HEATING, VENTILATING AND AIR CONDITIONING SYSTEM. INCLUDE A COPY OF THE CONTROL DIAGRAMS AND A COMPLETE DESCRIPTION OF THE OPERATION OF THE CONTROL SYSTEM. INSTRUCT OWNER'S DESIGNATED REPRESENTATIVE AS TO PROPER OPERATION AND CARE OF SYSTEM.

3. REQUIREMENTS:

A. NOISE AND VIBRATION: EQUIPMENT SHALL OPERATE QUIETLY AND THE DESIGN OF THE SUPPORTS SHALL BE SUCH THAT THE OPERATION OF THE EQUIPMENT SHALL CAUSE NO PERCEPTIVE VIBRATION IN THE FLOORING ADJACENT TO THE EQUIPMENT, NOR CAUSE, DIRECTLY OR INDIRECTLY, VIBRATION OR OBJECTIONABLE NOISE IN ANY OTHER PORTION OF THE BUILDING AND/OR IN THE BUILDING STRUCTURE ITSELF.

B. FOUNDATIONS: FURNISH ALL FOUNDATIONS FOR EQUIPMENT COVERED IN THE SPECIFICATIONS, AS A PART OF THIS SECTION, UNLESS OTHERWISE INDICATED ON THE DRAWINGS.

4. WARRANTY:

A. FURNISH A FIVE (5) YEAR WARRANTY ON ALL COMPRESSORS AND A ONE (1) YEAR SERVICE AND GUARANTEE ON ALL CONTROLS, EQUIPMENT AND MATERIALS.

5. MECHANICAL SUBMITTALS:

A. SUBMITTALS ARE REQUIRED ON THE FOLLOWING ITEMS AND THEY MUST BE SELECTED FROM ONE OF THE MANUFACTURERS LISTED:

1. RTU UNITS CARRIER
2. FANS – BROAN (NEW)
3. GRILLES, REGISTERS & DIFFUSERS – PRICE, TITUS, AIR GUIDE OR METALAIRE.
4. FLEXIBLE DUCT & FITTINGS – GENFLEX, THERMAFLEX
5. THERMOSTAT (CARRIER 33CS2PP2S-03 OR EQUAL)

PRODUCTS

1. LOW PRESSURE DUCTWORK

A. SUPPLY & RETURN AIR DUCTWORK AS INDICATED ON PLAN SHALL BE EXTERNALLY INSULATED GALVANIZED SHEET METAL (FIBERGLASS NOT PERMITTED), GAUGES, REINFORCING AND JOINING CONNECTIONS SHALL BE IN STRICT ACCORDANCE WITH SMACNA LOW VELOCITY DUCT STANDARDS LATEST EDITION. ALL DUCTS WIDER THAN 18" SHALL BE CROSS BROKEN. PROVIDE ANGLE STIFFENERS AS REQUIRED TO AVOID DUCT VIBRATION. EXTERNAL INSULATION SHALL BE 2" THICK, 3/4 LB. DENSITY DUCT WRAP.

B. ALL DUCT SIZES INDICATED ON DRAWINGS ARE CLEAR INSIDE DIMENSIONS.

C. ALL DUCTWORK TO BE HUNG WITH GALVANIZED STRAP HANGERS 24 GAUGE x 2" WITH A MAXIMUM SPACING OF 8'-0" O.C.

D. ALL ELBOWS WILL BE SQUARE TURNS WITH DOUBLE VANE TURNING VANES EXCEPT WHERE SHOWN ON THE DRAWINGS.

E. WHERE SHOWN ON THE DRAWINGS, PROVIDE VOLUME DAMPERS WITH LOCKING QUADRANTS OR SPLITTERS WITH HINGE AND ROD THROUGH SIDE OF DUCT WITH SET SCREW. VOLUME DAMPER HANDLES SHALL BE INSTALLED ON THE BOTTOM OF THE SPIN-IN FITTING AND SHALL HAVE RING SET IN FULL OPEN POSITION.

F. ALL FLEXIBLE DUCTS SHALL BE SUPPORTED EVERY 4'-0" WITH 2" WIDE GALV. STEEL BANDS. MINIMUM ONE PER EACH SECTION OF FLEXIBLE DUCT.

2. MANUAL DAMPERS

A. PROVIDE MANUAL LOUVER DAMPERS WHERE SHOWN ON THE PLANS AND WHERE NECESSARY FOR THE PROPER REGULATION OF THE AIR HANDLING SYSTEM, AND SO LOCATE AS TO BE ACCESSIBLE AFTER THE BUILDING IS COMPLETED, I.E. BY REMOVING A MARKED TILE, ACCESS PANEL OR OTHER APPROVED METHOD. DAMPERS SHALL BE AIR BALANCE NO. AC116.

3. EXHAUST FANS

A. THIS CONTRACTOR SHALL INSTALL ALL EXHAUST FANS AS SCHEDULED ON THE CONTRACT DOCUMENTS.

4. CONTROLS

A. PROVIDE ADJUSTABLE HEATING AND COOLING THERMOSTATS LOCATED IN THE MANAGERS OFFICE AND PROVIDE REMOTE TEMPERATURE SENSORS LOCATED WITHIN THE RESPECTIVE SPACE.

5. PIPING:

A. CONDENSATE DRAIN LINES SHALL BE SCH 40 PVC.

6. SMOKE DETECTORS

A. SMOKE DETECTORS REQUIRED IN DUCTWORK SHALL BE IONIZATION TYPE AND LISTED BY UL OR FM FOR DUCT INSTALLATION. DUCT DETECTORS SHALL BE PROVIDED WITH AN APPROVED DUCT HOUSING, MOUNTED EXTERIOR TO THE DUCT, AND SHALL BE PROVIDED WITH PERFORATED SAMPLING TUBES EXTENDING ACROSS THE WIDTH OF THE DUCT. ALSO PROVIDE SMOKE DETECTORS WITH A REMOTE AUDIO/VISUAL LED LIGHT IN CEILING BELOW DETECTOR ALARM INDICATOR WITH KEY SWITCH FOR RESET. MOUNT 5' A.F.F. NEAR DUCT. ACTIVATION OF A DUCT DETECTOR SHALL CAUSE SHUTDOWN OF IT'S RESPECTIVE AIR CONDITIONING UNIT. CONTROL AND INTERLOCK WIRING SHALL RUN IN CONDUIT WHICH SHALL BE SIZED TO SUIT THE NUMBER, TYPE AND SIZE OF CONDUCTORS, SHALL BE PROVIDED BY THE CONTROL CONTRACTOR. CONTROL AND INTERLOCK WIRING SHALL BE SEPARATE FROM POWER WIRING OF DIVISION 16. ALL WIRING SHALL BE IN ACCORDANCE WITH DIVISION 16. DUCT SMOKE DETECTOR SHALL BE WIRED AND INTERLOCKED WITH BUILDING FIRE ALARM SYSTEM. DUCT SMOKE DETECTORS SHALL BE SUPPLIED BY THE UNIT MANUFACTURER, AND WIRED BY THE ELECTRICAL CONTRACTOR.

B. THE REMOTE TEST/RESET ANNUNCIATORS SHALL BE PROVIDED BY THE ELECTRICAL CONTRACTOR AND INSTALLED BY THE MECHANICAL CONTRACTOR. INSTALLATION BY MECHANICAL SHALL INCLUDE MOUNTING OF THE ANNUNCIATORS AND ALL WIRING FROM EACH DEVICE TO THE RTU. ELECTRICAL WILL PROVIDE A JUNCTION BOX IN THE WALL WITH 1/2" CONDUIT STUBBED UP ABOVE THE CEILING FOR EACH

7. GRILLES, REGISTERS AND DIFFUSERS:

A. ALL SUPPLY, RETURN AND EXHAUST GRILLES SHALL BE OF ALUMINUM CONSTRUCTION OR AS SCHEDULED ON THE DRAWINGS.

8. FLEXIBLE DUCT:

A. FLEXIBLE DUCT SHALL BE EQUIVALENT TO GENFLEX TYPE SLR-25 FLEX DUCT.

B. FITTINGS SHALL BE EQUIVALENT TO GENFLEX SPIN COLLAR WITH SCOOP AND DAMPER, MODEL SM-1 DEL. ALL FITTINGS SHALL BE INSULATED.

EXECUTION

1. SUPERVISION OF ELECTRICAL WORK:

A. THIS CONTRACTOR SHALL BE RESPONSIBLE FOR SUPERVISION OF ALL WIRING (INCLUDING CONTROL WIRING) OF EQUIPMENT INCLUDED IN THIS SECTION AND SHALL FURNISH ALL NECESSARY DIAGRAMS REQUIRED, INCLUDING CONTROL WIRING DIAGRAMS. MOUNT ALL CONTROL DEVICES.

2. PIPING, EQUIPMENT, INSTALLATION:

A. ENTIRE INSTALLATION SHALL BE IN ACCORDANCE WITH THE DRAWINGS, SPECIFICATIONS AND APPLICABLE REQUIREMENTS OF THE MANUFACTURERS OF THE EQUIPMENT AND SHALL PERFORM SATISFACTORILY AT THE COMPLETION OF THE WORK.

3. PAINTING:

A. EXCEPT AS SPECIFIED HEREIN, ALL PAINTING WILL BE DONE BY OTHERS. LEAVE WORK FREE FROM RUST, DIRT, GREASE AND PLASTER.

B. EQUIPMENT WITH A FACTORY APPLIED FINISH SHALL HAVE SCRATCHES, CHIPS, ETC. PRIMED AND TOUCHED UP WITH MATERIALS WHICH WILL PROTECT THE SURFACE AND MATCH THE ADJACENT AREAS.

4. CLEANING AND ADJUSTMENTS:

A. UPON COMPLETION OF WORK, CLEAN, OIL AND GREASE ALL FANS, MOTORS, OTHER RUNNING EQUIPMENT AND APPARATUS AND MAKE CERTAIN THAT ALL SUCH APPARATUS AND MECHANISMS ARE IN PROPER WORKING ORDER AND MADE READY FOR TEST.

1. EXISTING EQUIPMENT, APPURTENANCES AND ASSOCIATED DUCTWORK PROPOSED FOR REUSE SHALL BE CLEANED, TESTED AND CALIBRATED BY THE HVAC CONTRACTOR. ANY DEFECTIVE PARTS SHALL BE REPLACED TO BRING UNITS UP TO GOOD OPERATING CONDITION. EXISTING THERMOSTATS SHALL BE REUSED AND/OR RELOCATED. EXISTING T'STATS SHALL ALSO BE CLEANED, TESTED, CALIBRATED AND REPAIRED AS NECESSARY FOR PROPER OPERATION.

5. TEST AND BALANCE: GENERAL

A. BUILDING AIR SYSTEMS SHALL BE BALANCED PER DATA INCLUDED ON THE DRAWINGS TO ACHIEVE RELATIVE AIR VOLUMES AS INDICATED ON THE DRAWINGS AND SCHEDULED HEREIN.

6. PERFORMANCE

A. THE CONTRACTOR SHALL ENGAGE AN INDEPENDENT AIR BALANCING AGENCY SUBSEQUENT TO THE APPROVAL OF THE OWNERS REPRESENTATIVE. THE T&B AGENCY CAN ONLY ACT AS HIS OWN REPORTING AGENCY IF SUITABLE INSTRUMENTS HEREINAFTER REQUIRED ARE DEMONSTRATED TO BE PART OF HIS NORMAL PROCEDURE TO THE SATISFACTION OF THE OWNERS REPRESENTATIVE. THE T&B AGENCY SHALL BE AABC OR NEBB CERTIFIED.

7. MEASURING TECHNIQUES

A. PITOT TUBE TRAVERSE SHALL BE PERFORMED TO DETERMINE THE TOTAL FLOW OF ALL HVAC SYSTEMS.

B. ALL DIFFUSERS, REGISTERS AND GRILLES WITH A FACE DIMENSION OF 24" OR LESS SHALL BE MEASURED BY UTILIZING A HOOD AXIAL VANE VELOMETER.

C. USE VOLUME DAMPERS LOCATED IN DUCTS AND BALANCE DIFFUSERS.

D. DUCT SMOKE DETECTORS SHALL ACTIVATE A VISIBLE AND AUDIBLE SIGNAL AT A NORMALLY OCCUPIED LOCATION AND SHALL BE MONITORED BY THE FACP AND REPORT AS A SUPERVISORY SIGNAL PER NFPA 72 AND THE 2006 FMC.

E. DUCT SMOKE DETECTORS REQUIRE A REMOTE LED INDICATOR THRU THE CEILING LEVEL. NFPA 72 3-8.3 AND 5-10.6.8.

F. DUCT SMOKE DETECTORS TO PROVIDE SHUT DOWN IN 30 SECONDS OR LESS.

8. SUBMITTALS

A. IT SHALL BE THE RESPONSIBILITY OF THIS T&B AGENCY TO PROVIDE THE LOCAL BLDG. DEPT. AND OWNER WITH PROPER TEST & BALANCE DATA ON AABC OR NEBB FORMS.

HVAC GENERAL NOTES

1. ALL DRAWINGS ARE CONCEPTUAL AND SCHEMATIC AND ARE INTENDED FOR USE AS A DESIGN/BUILD GUIDELINE. THE CONTRACTORS ARE RESPONSIBLE FOR VERIFYING ALL FIELD CONDITIONS AND ADJUSTING' OR MODIFYING THE SPECIFIC ELEMENTS OF THEIR WORK AS REQUIRED TO MEET THE DESIGN INTENT. THE CONTRACTORS ARE RESPONSIBLE FOR THE FOLLOWING:

   A COORDINATION WITH OTHER TRADES.

   B PROVIDING ADDITIONAL DRAWINGS. CALCULATIONS AND OTHER DOCUMENTATION REQUIRED FOR THE BUILDING DEPARTMENT. THE MECHANICAL CONTRACTOR SHALL DOCUMENT THE INSTALLATION AND PROVIDE ALL TESTS REQUIRED TO SUBSTANTIATE CODE COMPLIANCE AS REQUIRED BY THE BUILDING DEPARTMENT AND LOCAL INSPECTOR. CONTRACTOR SHALL SUBMIT FINAL AS-BUILT DRAWINGS TO BUILDING DEPARTMENT FOR RECORD AT COMPLETION.

2. MECHANICAL PLANS ARE DIAGRAMMATIC IN NATURE, NOT SHOWING EVERY ITEM IN EXACT LOCATION OR DETAIL. MEASUREMENTS AND LOCATIONS MUST BE FIELD VERIFIED AND COORDINATED WITH ARCHITECTURAL, HVAC, FIRE PROTECTION, STRUCTURAL, ELECTRICAL AND OTHER BUILDING DRAWINGS.

3. FURNISH ALL LABOR, MATERIALS, TOOLS, INCIDENTALS AND DETAILS NECESSARY TO PROVIDE A COMPLETE HEATING, VENTILATING, AIR CONDITIONING SYSTEM. INCLUDE ANY LABOR AND MATERIAL NOT SPECIFICALLY MENTIONED, BUT NECESSARY TO PROVIDE A COMPLETE AND OPERATING SYSTEM. ALL WORK SHALL BE INSTALLED IN A PROFESSIONAL MANNER AND SHALL MEET ALL THE REQUIREMENTS OF THE STATE BUILDING CODE, CITY BUILDING CODE, SAFETY AND HEALTH CODES, NFPA CODES AND ALL OTHER APPLICABLE CODES AND REQUIREMENTS. ALL COSTS FOR SAID REQUIREMENTS SHALL BE INCLUDED IN THIS CONTRACTORS BID PRICE.

4. ALL WORK SHALL BE IN STRICT ACCORDANCE WITH THE FOLLOWING CODES:
   2014 FMC AND LOCAL CODE
   2012 INTERNATIONAL ENERGY CONSERVATION CODE

5. CONTRACTOR SHALL SECURE AND PAY FOR ALL REQUIRED PERMITS AND INSPECTIONS AND PERFORM ALL TESTS CALLED FOR OR REQUIRED AS A PART OF HIS WORK. FURNISHED APPROVED CERTIFICATE OF FINAL INSPECTION, AND TURN OVER TO OWNER AT COMPLETION OF PROJECT.

6. CONTRACTOR SHALL BE RESPONSIBLE FOR COORDINATION OF ALL TRADES, OWNER REQUIREMENTS, CEILING HEIGHTS AND STRUCTURAL CONDITIONS PRIOR TO FABRICATION OF ANY DUCTWORK OR ORDERING OF ANY EQUIPMENT.

7. ALL INSTALLATION OF THE MECHANICAL EQUIPMENT SHALL COMPLY WITH THE MANUFACTURER'S SPECIFICATION AND CLEARANCE REQUIREMENTS.

8. ALL HVAC WORK SHALL BE IN ACCORDANCE WITH NFPA 90A, 90B, 96, 54 AND NFC 101. LIFE SAFETY CODE.

9. INSTALLATION SHALL COMPLY WITH ALL LOCAL, STATE AND NATIONAL CODES, AND WITH LATEST ASHRAE PUBLICATIONS. WORK SHALL BE NEAT AND WORKMANSHIP SHALL BE ACCEPTABLE TO BUILDING STANDARDS.

10. CONTRACTOR SHALL FURNISH AND INSTALL A COMPLETE TEMPERATURE CONTROL SYSTEM TO INCLUDE: PANELS, MODULES, RELAYS, WIRING, THERMOSTATS, SENSORS, DAMPERS, ACTUATORS AND ALL MISCELLANEOUS ITEMS AS REQUIRED TO FULFILL THE DESIGN INTENT AS INDICATED ON THE PLANS AND IN THE CODED NOTES. THERMOSTATS AND SENSORS SHALL BE LOCATED GENERALLY AS SHOWN BUT THEIR EXACT LOCATION SHALL BE FIELD COORDINATED TO AVOID INTERFERENCE WITH WALL MOUNTED WORK.

11. ALL CONTROL WIRING, CONDUIT, AND HARDWARE TO COMPLETE THE HVAC CONTROL SYSTEMS SHALL BE FURNISHED AND INSTALLED BY THE MECHANICAL CONTRACTOR UNDER DIVISION 15 OF THE SPECIFICATIONS.

12. DURING THE BIDDING PERIOD, EACH CONTRACTOR SHALL VISIT THE SITE TO DETERMINE CONDITIONS AFFECTING THE WORK. BIDS SHALL SERVE AS EVIDENCE OF KNOWLEDGE OF EXISTING CONDITIONS AND ANY MODIFICATIONS WHICH ARE REQUIRED TO MEET THE INTENT OF THE DRAWINGS AND SPECIFICATIONS. FAILURE TO VISIT THE SITE DOES NOT RELIEVE THE CONTRACTOR OF RESPONSIBILITY IN PERFORMANCE OF WORK REQUIRED CONDITIONS IN EVIDENCE THEREBY SHALL NOT BE JUSTIFICATION FOR ADDITIONAL COMPENSATION.

13. THE EQUIPMENT SHALL BE LOCATED TO ALLOW FOR EASY ACCESS FOR SERVICING, ADJUSTING OR MAINTENANCE AND SPACE FOR REMOVAL OF INTERNAL ASSEMBLIES. PROVIDE MINIMUM CLEARANCES FOR ALL EQUIPMENT PER THE MANUFACTURERS RECOMMENDATIONS.

14. PROVIDE ALL CONTROL EQUIPMENT, MOTOR STARTERS, RELAYS, LINE VOLTAGE CONTROLS, TRANSFORMERS, LOW VOLTAGE CONTROLS, AND DEVICES NECESSARY FOR THE COMPLETE OPERATION OF THE HEATING AND AIR CONDITIONING AND VENTILATING SYSTEM.

15. ALL LOW VOLTAGE WIRING AND CONDUIT REQUIRED FOR MECHANICAL EQUIPMENT SHALL BE FURNISHED AND INSTALLED BY MECHANICAL CONTRACTOR.

16. SMOKE DETECTORS WIRED BY DIVISION 16.

17. PROVIDE ALL FANS AND ROOFTOP UNITS WITH RELAYS TO SHUT DOWN WHEN FIRE ALARM IS INITIATED. COORDINATE LOCATION WITH THE ELECTRICAL CONTRACTOR FOR THE FIRE ALARM WIRING.

18. IN THE EVENT OF FAN SHUT DOWN, ALL DUCT MOUNTED DETECTORS SHALL REMAIN IN OPERATION.

19. ALL WORK SHALL BE IN STRICT ACCORDANCE WITH STATE AND LOCAL CODES AND ORDINANCES AND THE NATIONAL ELECTRIC CODE.

20. THE CONTRACTOR SHALL PROVIDE SHOP DRAWINGS PRIOR TO PURCHASING OR INSTALLING EQUIPMENT AND SYSTEMS INDICATED ON THE CONTRACT DOCUMENTS. PRIOR TO THE SUBMITTAL THE CONTRACTOR SHALL VERIFY THAT ADEQUATE SPACE EXIST FOR THE SUBMITTED EQUIPMENT. SHOP DRAWINGS MUST BE REVIEWED BY THE ENGINEER AND ARCHITECT.

21. ALL THE BARE METAL SURFACES SHALL BE PRIMED AND PAINTED TO PREVENT ANY RUST, INCLUDING, BUT NOT LIMITED TO, ANGLE FRAMING, UNIT SUPPORTS, MOUNTING HARDWARE, ETC.

22. CONTRACTOR TO PROVIDE TENANT WITH AS-BUILT DRAWINGS OF ALL CHANGES OR MODIFICATIONS MADE IN THE FIELD, TO THE ORIGINAL SET OF CONSTRUCTION DOCUMENTS, FOR TURN-OVER TO THE ARCHITECT/ ENGINEER UPON COMPLETION OF THE PROJECT. PROVIDE ALL EQUIPMENT SHOP DRAWINGS, INFORMATION ON CONTROL DEVICES, CONTROL WIRING DIAGRAMS AND OTHER PERTINENT INFORMATION AT COMPLETION OF PROJECT.

23. IT IS THE CONTRACTOR'S RESPONSIBILITY TO ENSURE THAT THE MECHANICAL EQUIPMENT COMPONENTS ARE INSTALLED AT LOCATIONS AND ELEVATIONS WHICH MAKE THEM READILY ACCESSIBLE FOR ROUTINE MAINTENANCE WITHOUT REQUIRING ANY EXTRAORDINARY MEASURES.

24. THE MECHANICAL CONTRACTOR SHALL BE RESPONSIBLE FOR ADMINISTERING ALL WARRANTIES ON EQUIPMENT WHICH HE INSTALLS. THIS INCLUDES ALL CONDENSERS, REFRIGERANT PIPES, AND OTHER ITEMS FURNISHED BY OTHERS AS WELL AS THOSE FURNISHED BY HIM.

25. CONDENSATE DRAINAGE PIPING FROM RTU'S SHALL BE TRAPPED, SUPPORTED AND RUN AS SHOWN ON DRAWINGS.

26. FIELD VERIFY THE EXACT LOCATION OF ALL EQUIPMENT WITH ARCHITECT/OWNER PRIOR TO INSTALLATION. INFORM OWNER OF ANY EQUIPMENT ITEMS THAT REQUIRE RELOCATION.

27. CONTRACTOR SHALL VERIFY THAT ALL EQUIPMENT. AS SHOWN ON THESE DRAWINGS, WILL NOT CONFLICT WITH ANY DRAINS, VENTS, MECH. PIPING OF ANY KIND, ELECTRICAL, ETC.

28. PROVIDE VIBRATION ISOLATION DEVICES AND FLEXIBLE CONNECTIONS TO ALL MOVING MACHINERY.

29. DUCT DIMENSIONS SHOWN ARE INSIDE NET DIMENSIONS, ADD TO SHEET METAL SIZE FOR INSULATION THICKNESS. HOLD DUCTWORK TIGHT TO UNDERSIDE OF STRUCTURE UNLESS OTHERWISE NOTED OR REQUIRED BY FIELD CONDITIONS. IT IS REQUIRED TO COORDINATE EXACT MOUNTING HEIGHT IN FIELD WITH SITE INVESTIGATION. SUPPLY, RETURN, OUTSIDE AIR DUCTS SHALL BE EXTERNALLY INSULATED. INSULATION WRAP SHALL BE SEALED WITH FAB AND MASTIC.

30. ALL DUCTWORK SHALL MAINTAIN SYSTEM PRESSURE. THE AIR DISTRIBUTION COMPONENTS SHALL BE SEALED IN ACCORDANCE WITH SMACNA REQUIREMENTS. TWO INCH PRESSURE CLASS.

31. ALL EXHAUST AIR DUCTWORK SHALL BE A MINIMUM 24 GA. GALV. SHEET METAL DUCTWORK, DUCTBOARD IS NOT PERMITTED.

32. DUCT INSULATION CLOSURE SYSTEM SHALL CONSIST OF GLASS FABRIC AND NON MIGRATING MASTIC, SEAL AIR TIGHT.

33. ALL FLEXIBLE DUCTS SHALL BE SUPPORTED EVERY 4'-0" WITH 2" WIDE GALV. STEEL BANDS. MINIMUM ONE PER EACH SECTION OF FLEXIBLE DUCT. MAXIMUM LENGTH OF FLEX DUCT SHALL BE 5'-0" LONG AND SHALL MEET INSTALLATION AND MATERIAL REQUIREMENTS OF LOCAL CODES.

34. NO FLEXIBLE DUCTS SHALL PASS THROUGH FIRE WALLS, OR BE CONNECTED TO ANY METAL DUCT WITH-IN 5'-0" FROM EITHER SIDE OF THE FIREWALL.

35. ALL BRANCH TAKE-OFFS SHALL BE PROVIDED WITH MANUAL BALANCING DAMPERS LOCATED ABOVE ACCESSIBLE CEILINGS AS CLOSE TO MAIN TRUNK AS POSSIBLE.

36. CONTRACTOR IS RESPONSIBLE FOR COORDINATING BOX-OUT LOCATIONS FOR ALL DRYWALL MOUNTED AIR DEVICES WITH GENERAL CONTRACTOR AND CEILING FRAMING. CONTRACTOR SHALL COORDINATE ALL DUCT AND DIFFUSER LOCATIONS WITH LIGHTING LAYOUTS AS REQUIRED.

37. ALL DUCTWORK BEHIND RETURN AIR PLENUMS SHALL BE PAINTED FLAT BLACK.

38. ALL SUPPLY DUCT BENDS FROM THE VERTICAL TO HORIZONTAL AND ANGLED TURNS OF DUCTWORK SHALL HAVE TURNING VANES INSTALLED.

39. PROVIDE SMOOTH TRANSITIONS AT EQUIPMENT AND AIR DEVICES TO MATCH CONNECTION SIZES. ALL DUCTWORK SHALL BE SHEET METAL FABRICATED IN ACCORDANCE WITH ASHRAE GUIDE AND SMACNA MANUAL LATEST EDITIONS.

40. THE CONTRACTOR SHALL ENGAGE AN INDEPENDENT AIR BALANCING AGENCY SUBSEQUENT TO THE APPROVAL OF THE OWNERS REPRESENTATIVE. THE T&B AGENCY CAN ONLY ACT AS HIS OWN REPORTING AGENCY IF SUITABLE INSTRUMENTS HEREINAFTER REQUIRED ARE DEMONSTRATED TO BE PART OF HIS NORMAL PROCEDURE TO THE SATISFACTION OF THE OWNERS REPRESENTATIVE. THE T&B AGENCY SHALL BE AABC OR NEBB CERTIFIED. CONTRACTOR SHALL PROVIDE LANDLORD WITH WATER AND AIR BALANCE REPORT.

41. IT SHALL BE THE RESPONSIBILITY OF THIS T&B AGENCY TO PROVIDE THE LOCAL BLDG. DEPT. AND OWNER WITH PROPER TEST & BALANCE DATA ON AABC OR NEBB FORMS.

42. BUILDING AIR SYSTEMS SHALL BE BALANCED PER DATA INCLUDED ON THE DRAWINGS TO ACHIEVE RELATIVE AIR VOLUMES AS INDICATED ON THE DRAWINGS AND SCHEDULED HEREIN.

43. BOTH OUTDOOR AIR SUPPLY AND EXHAUST DUCTS SHALL BE EQUIPPED WITH DAMPERS THAT WILL AUTOMATICALLY SHUT WHEN SYSTEMS OR SPACES SERVED ARE NOT IN USE.

HVAC ABBREVIATIONS

A	AMPS
AFF	ABOVE FINISHED FLOOR
BTU	BRITISH THERMAL UNIT
CFM	CUBIC FEET PER MINUTE
DIA	DIAMETER
EF	EXHAUST FAN
RTU	EXISTING ROOF TOP UNIT FAN
ESP	EXTERNAL STATIC PRESSURE
°F	DEGREE FAHRENHEIT
FT	FOOT OR FEET
HP	HORSEPOWER
kW	KILOWATT
HZ	HERTZ
IN	INCH
MAX	MAXIMUM
MBH	1,000 BTU'S PER HOUR
MCA	MAXIMUM CIRCUIT AMPACITY
MIN	MINIMUM
MOCP	MAXIMUM OVERCURRENT PROTECTION
N T S	NOT TO SCALE
OA	OUTSIDE AIR
PH	PHASE
RLA	RUNNING LOAD AMPS
RTU	NEW ROOF TOP UNIT
SA	SUPPLY AIR
SQ. FT.	SQUARE FEET
T	THERMOSTAT

HVAC SYMBOLS LEGEND

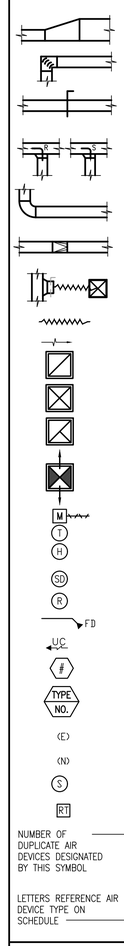

FIELD VERIFY ALL CONDITIONS

NOTE! AS NOTED IN THE SPECIFICATIONS, ALL WIRING LAYOUTS, PIPING LAYOUTS AND DUCT LAYOUTS ARE SCHEMATIC. EXACT LOCATIONS SHALL BE DETERMINED BY THE CONSTRUCTION AND STRUCTURE OF THE BUILDING AND SHALL BE VERIFIED AND COORDINATED IN THE FIELD. EACH TRADE CONTRACTOR SHALL VERIFY WITH THE GENERAL CONTRACTOR THAT HE HAS THOROUGHLY REVIEWED AND COORDINATED ALL LOCATIONS AND ROUTINGS WITH ALL OTHER TRADES PRIOR TO FABRICATION OF CONDUITS, DUCTS, OR PIPING, AND START OF INSTALLATION OF SAME (INCLUDING SPRINKLER PIPING WHEN PRESENT ON JOB). ANY INSTALLATION OR CONSTRUCTION CONFLICTS WHICH OCCUR IN THE FIELD SHALL BE RESOLVED BY THE TRADE CONTRACTOR TO THE SATISFACTION OF THE OWNER AND ARCHITECT AND AT NO EXPENSE TO THE OWNER, ARCHITECT AND/OR GENERAL CONTRACTOR.

THE CONTRACTOR SHALL CONTACT THE ARCHITECT, ENGINEER OR OWNER PRIOR TO BIDDING FOR INTERPRETATIONS AND CLARIFICATIONS OF THE DESIGN AND INCLUDE IN HIS BID ALL COSTS TO MEET THE DESIGN INTENT. CLARIFICATIONS MADE BY THE ARCHITECT, ENGINEER OR OWNER AFTER BIDDING WILL BE FINAL AND SHALL BE IMPLEMENTED AT CONTRACTORS COST.

BIDDING CONTRACTORS SHALL HAVE A WORKING KNOWLEDGE OF LOCAL CODES AND ORDINANCES AND SHALL INCLUDE IN THEIR BIDS THE COSTS FOR ALL WORK INSTALLED IN STRICT ACCORDANCE WITH GOVERNING CODES, THE PLANS AND SPECIFICATIONS NOT WITHSTANDING. THE CONTRACTOR SHALL ALERT ARCHITECT, ENGINEER OR OWNER OF ANY APPARENT DISCREPANCIES BETWEEN GOVERNING CODES AND DESIGN INTENT.

NOTE:
MAXIMUM LENGTH OF FLEX DUCTWORK SHALL BE 5 FEET.

INTERPLAN LLC
ARCHITECTURE
ENGINEERING
INTERIOR DESIGN
PROJECT MANAGEMENT

AA 003420
CA 8660

604 COURTLAND STREET
SUITE 100
ORLANDO, FLORIDA 32804
PH 407.645.5008
FX 407.629.9124

SEAL:

THIS DOCUMENT IS NOT FOR REGULATORY APPROVAL, PERMITTING, OR CONSTRUCTION.

NO	DATE	REMARKS

REVISIONS

SHELL BUILDING for DOLLAR TREE

N HWY 19 & CR 44
EUSTIS, FL

PROJECT NO: 2018.0328
DATE: 08-27-2018

M0.1

MECHANICAL SPECS NOTES & LEGEND

CHECKED: AS DRAWN: AE

COPYRIGHT © 2018 INTERPLAN LLC. C:\SERVER\CS\TOWER\BIM\BIM\CONTRACTOR\MASTER\CONTRACTOR\CONTRACTOR\CONTRACTOR

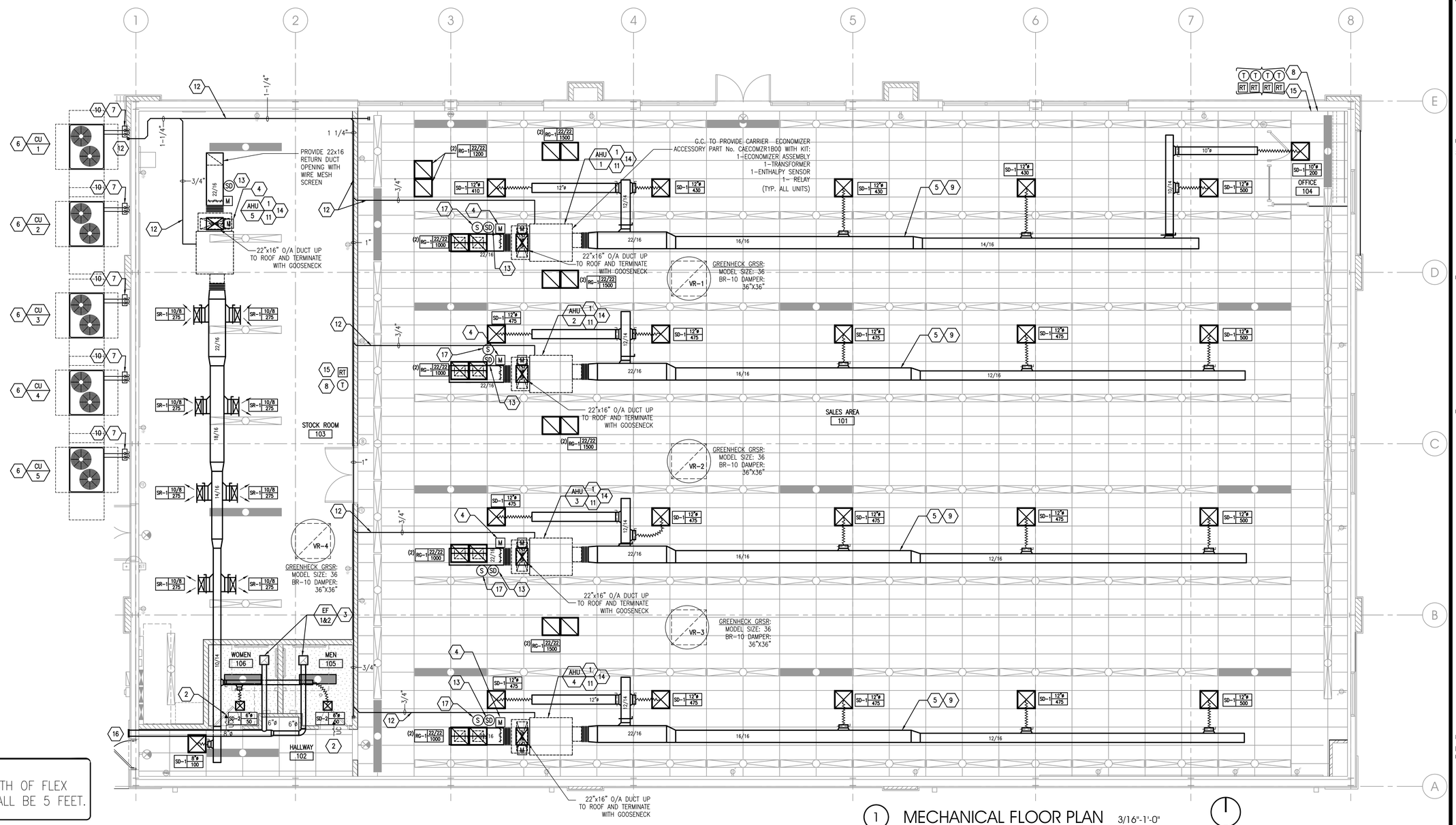

1 MECHANICAL FLOOR PLAN 3/16"-1'-0"

GENERAL PLAN NOTES

1. DRAWINGS ARE DIAGRAMMATIC ONLY AND REPRESENT THE GENERAL SCOPE OF THE WORK. PRIOR TO SUBMITTING BID, VISIT THE JOB SITE TO OBSERVE THE EXISTING CONDITIONS OF THE PROJECT. REVIEW GENERAL NOTES, SPECIFICATIONS AND PLANS FOR ADDITIONAL REQUIREMENTS THAT MAY NOT BE SPECIFICALLY CALLED OUT IN THIS PORTION OF THE CONSTRUCTION DOCUMENTS. NOTIFY ARCHITECT OF ANY CONFLICTS OR DISCREPANCIES PRIOR TO SUBMISSION OF BID.
2. INSTALLATION OF EQUIPMENT SHALL COMPLY WITH EQUIPMENT MANUFACTURER'S INSTALLATION AND CLEARANCE REQUIREMENTS TO ALLOW FOR INSPECTION, SERVICE, REPAIR OR REPLACEMENT.
3. DUCT SIZES SERVING DIFFUSERS AND GRILLES ARE SAME SIZE AS DIFFUSER OR GRILLE NECK UNLESS NOTED OTHERWISE.
4. CONTRACTOR IS RESPONSIBLE FOR COORDINATING BORDERS FOR DIFFUSERS/REGISTERS WITH ARCHITECTURAL CEILING TYPES.
5. PROVIDE VOLUME BALANCING DAMPER AT ALL NINETY-DEGREE DUCT TAKE-OFFS. THIS ALSO APPLIES TO TAKE-OFFS TO DIFFUSERS OR REGISTERS LOCATED DIRECTLY UNDER DUCTS.
6. CONTRACTOR SHALL PERFORM A COMPLETE CERTIFIED TEST AND BALANCE OF EACH MECHANICAL SYSTEM INCLUSIVE OF EXHAUST FANS, SPLIT SYSTEM AIR HANDLING UNITS, ROOFTOP UNITS, VARIABLE AIR VOLUME BOXES, FAN COIL UNITS AND CEILING DEVICES. SEE SPECIFICATIONS FOR DETAILS AND PROVIDE THREE (3) WRITTEN COPIES OF THE COMPLETED TEST AND BALANCE REPORT TO THE OWNER FOR REVIEW.
7. MAXIMUM LENGTH OF FLEX DUCTWORK SHALL BE 5 FEET OR PER LOCAL CODE.
8. MECHANICAL CONTRACTOR TO FIELD VERIFY WITH STRUCTURE ALL DUCT ROUTING PRIOR TO FABRICATION.
9. PROVIDE ACCESS TO ALL COMPONENTS REQUIRING PERIODIC INSPECTION AND SERVICE THAT ARE LOCATED WITHIN THE SPACE OR REQUIRE ACCESS THROUGH THE SPACE. LABEL ACCESS DOORS AND PANELS OR CEILING TILES UTILIZED FOR ACCESS WITH THE NAME OF THE HIDDEN COMPONENT(S). DEMONSTRATE ACCESS TO ALL HIDDEN COMPONENTS FOR THE FIELD REPRESENTATIVE PRIOR TO OCCUPANCY.
10. CONTRACTOR SHALL COMPLY WITH ALL OWNER'S CRITERIA. COORDINATE AND SCHEDULE ALL WORK WITH OWNER'S FIELD REPRESENTATIVE.
11. WIRE SMOKE DETECTORS TO BUILDING FIRE ALARM CONTROL PANEL, IF EXISTING, OR ELSE FURNISH AND INSTALL A COMPATIBLE REMOTE AUDIBLE/VISUAL ALARM DEVICE. FIELD VERIFY EXACT REQUIREMENTS. PER SIGNAL FROM SMOKE DETECTOR, UNIT SHALL SHUT DOWN AND ALL DAMPER SHALL CLOSE. CONTRACTOR SHALL TEXT SYSTEM, PRIOR TO TURNOVER, TO INSURE PROPER FUNCTION.
12. PROVIDE ALL NECESSARY TRANSITIONS AND OFFSETS AND OFFSETS IN SUPPLY AND RETURN AIR DUCTWORK TO AVOID STRUCTURE, WATER, GAS, SPRINKLER PIPING, OTHER DUCTWORK, OTHER TRADES, ETC. DUCTWORK SHALL BE INSTALLED AS HIGH AS CONDITIONS WILL ALLOW.

MECHANICAL PLAN KEYED NOTES

1. CONTRACTOR TO FURNISH AND INSTALL A NEW 6 TON ELECTRIC COOLING/ELECTRIC HEATING SPLIT SYSTEM DX AIR HANDLING UNIT WITH MATCHING AIR COOLED CONDENSING UNIT. REFER TO EQUIPMENT SCHEDULE ON SHEET M2.0. PROVIDE ALL CONTROLS AND THERMOSTATS FOR A COMPLETE OPERATIONAL SYSTEM. CONTRACTOR SHALL VERIFY AIR QUANTITY, SYSTEM PRESSURE AND DISCHARGE AIR TEMPERATURE PRIOR TO ORDERING EQUIPMENT. SUBMIT SHOP DRAWINGS PER EQUIPMENT. UNIT SHALL INCLUDE THREE SETS OF FILTERS. REPLACE FILTERS JUST PRIOR TO AIR BALANCE AND ONCE AGAIN AFTER FINAL STORE CLEANING IS COMPLETE. PROVIDE COMBINATION IN LINE SPRING RUBBER SHEAR VIBRATION ISOLATORS. PROVIDE ACCESS TO ALL MECHANICAL COMPONENTS AS REQUIRED BY MANUFACTURER. FIELD VERIFY EXACT REQUIREMENTS.
2. UNDERCUT DOOR 1" FOR AIR PASSAGE.
3. PROVIDE A CABINET STYLE EXHAUST FAN. INTERLOCK EXHAUST FAN WITH LIGHT SWITCH. EXHAUST DUCT SHALL BE MINIMUM 26GA. GALVANIZED STEEL. PROVIDE RAIN CAP WITH INTEGRAL BIRD SCREEN, BACKDRAFT DAMPER, AND ACCESSORIES AS REQUIRED INCLUDING SPEED CONTROLLER CONCEALED AND ACCESSIBLE. PROVIDE ROOF CAP AND DISCHARGE VENT. REFER TO EXHAUST FAN SCHEDULE SHEET M2.0
4. PROVIDE WITH MODULATING DAMPER. OUTSIDE AIR DAMPER SHALL BE CAPABLE OF MODULATING BETWEEN FULLY OPEN AND FULLY CLOSED. CONTRACTOR SHALL TIE INTO AIR HANDLER CONTROLLER. SEAL ALL EXTERIOR PENETRATIONS WATER TIGHT. PROVIDE FIRE CAULKING AT RATED PENETRATION. FIELD VERIFY AND COORDINATE EXACT LOCATION PRIOR TO BID.
5. ALL MAIN TRUNK LINES SHALL BE GALVANIZED SHEET METAL OR DUCT BOARD (TYPICAL). INSULATE DUCT WITH 1 1/2" 3/4 LB INSULATION DUCT BOARD SHALL BE 1 1/2" THICK AND A MINIMUM R-6. ALL FLEX DUCT SHALL BE A MINIMUM R-6. VERIFY EXACT ROUTING AND SIZE PRIOR TO FABRICATION.
6. MOUNT CONDENSING UNIT ON 4" HIGH CONCRETE PAD TYPICAL. PAD DIMENSIONS SHALL EXCEED CONDENSING UNIT DIMENSIONS BY 4" ON ALL SIDES. PLACE CU'S AWAY FROM ROOF DRIP LINE. PROVIDE MANUFACTURER'S RECOMMENDED CLEARANCES. ANCHOR CU'S SECURELY TO PAD PER DETAIL ON SHEET M3.0. LOCATION OF CU'S ARE APPROXIMATE. FIELD COORDINATE CLOSELY WITH LANDSCAPING PLANS AND ARCHITECTURAL DETAILS PRIOR TO BID.
7. CONTRACTOR SHALL EXTEND REFRIGERANT LINES FROM AIR COOLED CONDENSING UNIT UP AND IN TO CEILING SPACE TO THE AIR HANDLING UNIT'S DX COIL AND MAKE FINAL CONNECTIONS. REFRIGERANT LINES SHALL BE SIZED PER MANUFACTURER'S RECOMMENDATIONS. PROVIDE INSULATION, VALVING, OIL TRAPS, DRYERS, SIGHT GLASSES AND ACCESSORIES AS REQUIRED FOR A COMPLETE AND OPERABLE SYSTEM. INSULATE ALL LINES PER LOCAL CODE. PROVIDE SHEET METAL COVER OVER REFRIGERANT LINE AND PAINT TO MATCH BLDG. VERIFY ALL ROUTING PRIOR TO BID.
8. CONTRACTOR SHALL PROVIDE A 7-DAY DIGITAL PROGRAMMABLE THERMOSTAT (33CS2PP2S-03 FOR AHU-1 THRU 5 IN MANAGERS OFFICE & 6 AS SHOWN ON PLAN MOUNTED 48" AFF. COORDINATE EXACT LOCATION WITH TENANT CONSTRUCTION MANAGER. THE ENTIRE CONTROL SYSTEM SHALL BE PROVIDED COMPLETE IN EVERY RESPECT BY THE MECHANICAL CONTRACTOR.
9. ALL DUCTWORK SHALL BE FABRICATED AND INSTALLED IN ACCORDANCE WITH THE SHEET METAL AND AIR CONDITIONING CONTRACTORS ASSOCIATION (SMACNA).
10. A MINIMUM OF 1.5 INCH THICK INSULATION IS REQUIRED FOR REFRIGERATION PIPING. UNLESS THE DESIGN OPERATION TEMPERATURE OF THE FLUID IS BETWEEN 55°F AND 105°F.
11. MECHANICAL CONTRACTOR TO INSTALL FLOAT SWITCH INSIDE AIR HANDLER DRAIN PAN. FLOAT SWITCH SHALL SHUT OFF THE EQUIPMENT SERVED IN THE EVENT THAT THE PRIMARY DRAIN BECOMES RESTRICTED. REFER TO INSTALLATION DETAIL ON SHEET M3.0.
12. THE MECHANICAL CONTRACTOR SHALL FURNISH AND INSTALL A CONDENSATE DRAIN LINE FROM THE AHU UNIT TO OUTSIDE GRASSY AREA. INSTALL PER LOCAL CODE. MINIMUM DRAIN SIZE TO BE 3/4" OR AS SPECIFIED ON PLANS. CONDENSATE DRAIN TO BE TRAPPED WITH A MINIMUM 5" TRAP DEPTH. PROVIDE WITH 2" AIR GAP. DRAINS SHALL BE EXTENDED AT A SLOPE OF 1" PER 40'. CONDENSATE DRAIN LINES TO BE HEAT TRACED AND INSULATED. VERIFY EXACT REQUIREMENTS PRIOR TO BID.
13. FIRE ALARM CONTRACTOR TO PROVIDE DUCT MOUNTED SMOKE DETECTOR IN THE RETURN AIR DUCT AS SHOWN ON PLAN AND REMOTE TEST STATION AND ALL WIRING CONNECTIONS. THE DUCT SMOKE DETECTORS SHALL BE COMPATIBLE WITH THE FIRE ALARM SYSTEM. THE MECHANICAL CONTRACTOR SHALL INSTALL THE SMOKE DETECTORS AND REMOTE TEST STATION. FIRE ALARM CONTRACTOR SHALL CONNECT TO A FIRE ALARM SYSTEM. THE ACTIVATION OF THE DUCT SMOKE DETECTOR SHALL ACTIVATE A AUDIBLE/VISUAL ALARM AT A CONSTANTLY ATTENDED LOCATION. MECHANICAL AND ELECTRICAL CONTRACTOR SHALL TEST AND VERIFY THE SMOKE DETECTION SYSTEM WORKS PROPERLY AND MEETS ALL LOCAL AND STATE CODES. EXACT LOCATION OF REMOTE STATION SHALL BE FIELD VERIFIED. REMOTE TEST IS NOT REQUIRED WHERE THE SMOKE DETECTORS CAN BE TESTED FROM THE FIRE ALARM PANEL.
14. BRANCH TAKE-OFFS ARE NOT TO BE LOCATED CLOSER THAN 5'-0" DOWNSTREAM FROM ANY ELBOW INCLUDING THE SUPPLY AIR DROP FROM CURB. TRANSITION IN VERTICAL DROP FROM FULL SIZE OF CURB OPENING TO SIZE SHOWN. PROVIDE TURNING VANES IN SUPPLY ELBOW.
15. PROVIDE REMOTE TEST STATION FOR SMOKE DETECTORS WITH AUDIBLE AND VISUAL ALARM WITH KEYED RESET. MOUNT TEST STATION(S) 48 INCHES AFF. MOUNT AUDIBLE AND VISUAL ALARM IN CONSTANTLY ATTENDED LOCATION. CONSTANTLY ATTENDED LOCATION IS NOT REQUIRED WHERE DUCT SMOKE DETECTOR ACTIVATES THE BUILDING'S ALARM SYSTEM.
16. PROVIDE A CABINET STYLE EXHAUST FAN. EXHAUST DUCT SHALL BE MINIMUM 26GA. GALVANIZED STEEL. PROVIDE RAIN CAP WITH INTEGRAL BIRD SCREEN, BACKDRAFT DAMPER, AND ACCESSORIES AS REQUIRED INCLUDING SPEED CONTROLLER CONCEALED AND ACCESSIBLE. SET EXHAUST FAN THERMOSTAT TO ENGAGE FAN AT 85°F. THERMOSTAT SHALL BE MOUNTED AT 48"AFF. PROVIDE TEMPERATURE/HUMIDITY SENSOR IN RETURN DUCTWORK OF UNIT.
17. PROVIDE TEMPERATURE/HUMIDITY SENSOR IN RETURN DUCTWORK OF UNIT.

INTERPLAN LLC
ARCHITECTURE
ENGINEERING
INTERIOR DESIGN
PROJECT MANAGEMENT

AA 003420
CA 8660

604 COURTLAND STREET
SUITE 100
ORLANDO, FLORIDA 32804
PH 407.645.5008
FX 407.629.9124

SEAL:

THIS DOCUMENT IS NOT FOR REGULATORY APPROVAL, PERMITTING, OR CONSTRUCTION.

NO	DATE	REMARKS

REVISIONS

SHELL BUILDING for DOLLAR TREE

N HWY 19 & CR 44
EUSTIS, FL

PROJECT NO: 2018.0328
DATE: 08-27-2018

M1.0

MECHANICAL FLOOR PLAN

CHECKED: AS DRAWN: AE

COPYRIGHT © 2018 INTERPLAN LLC FILE:S:\EBEN\WDFOR\BRIAN FOR OTHERS\HIS\TRSCNCHAS-SELSCO\DOLLAR\S-S3.TMP, EBEN, EBEN\BRIAN, EBE EBEN\BRIAN\FEDEX\FEDEX\ORANGE\HIT\HIT\HIT\PRESTON-SELSCO\PRESTON CH\CH-OVERLEE (DISMANTLEMENT) SITE PLAN.DWG

CONTROL SEQUENCE OF OPERATIONS: SPLIT STSTEM

ELECTRIC HEATING/ELECTRIC COOLING SPLIT SYSTEM SEQUENCE OF OPERATION

DAY CYCLE – COOLING

1. SUPPLY AIR FAN SHALL RUN CONTINUOUSLY. RELIEF DAMPER SHALL BE CLOSED.
2. OUTSIDE AIR DAMPER SHALL BE IN MINIMUM POSITION.
3. THERMOSTAT SHALL CYCLE CONDENSING COMPRESSOR(S) TO MAINTAIN ROOM SET TEMPERATURE.

DAY CYCLE – HEATING

1. SUPPLY AIR FAN SHALL RUN CONTINUOUSLY. RELIEF DAMPER SHALL BE CLOSED.
2. OUTSIDE AIR DAMPER SHALL BE IN MINIMUM POSITION.
3. THERMOSTAT SHALL CYCLE ELECTRIC HEATER TO MAINTAIN ROOM SET TEMPERATURE.

MORNING WARM–UP

1. SUPPLY AIR FAN SHALL RUN CONTINUOUSLY. RELIEF DAMPER SHALL BE CLOSED.
2. OUTSIDE AIR DAMPER SHALL BE IN CLOSED POSITION.
3. THERMOSTAT SHALL CYCLE ELECTRIC HEATER TO ACHEIVE ROOM SET TEMPERATURE.
4. WHEN SET TEMPERATURE IS REACHED DAY CYCLE SHALL COMMENCE.

ECONOMIZER– OUTSIDE AIR TEMPERATURE = 55°F OR LESS.

1. SUPPLY AIR FAN SHALL RUN CONTINUOUSLY.
2. OUTSIDE, RELIEF AND RETURN AIR DAMPERS SHALL MODULATE TO MAINTAIN SPACE TEMPERATURE.

NIGHT SETBACK

1. OUTSIDE AIR DAMPER SHALL BE IN CLOSED POSITION.
2. RETURN AIR DAMPER WILL BE IN 100% OPEN POSITION.
3. THERMOSTAT SHALL CYCLE EITHER COOLING OR HEATING AND SUPPLY AIR FAN TO MAINTAIN ROOM SET TEMPERATURE.

SMOKE DETECTOR

1. WHEN SMOKE DETECTOR IS ACTIVATED SUPPLY AND RETURN AIR FAN SHALL SHUTDOWN.
2. FIRE ALARM SHALL BE SIGNALED.
3. SUPPLY AIR FAN SHALL BE MANUALLY RESET.

BUILDING AIR BALANCE SCHEDULE

MARK	OUTSIDE AIR	EXHAUST
EF–1		–75
EF–2		–75
AHU–1,2,3 & 4	1600	
AHU–5	240	
TOTAL:	+1840	–150

TOTAL BUILDING PRESSURIZATION +1650 CFM

* ON INTERMITTENT WALL SWITH.

FLEX DUCT SIZE

0	–	80 CFM	–	6"ø
81	–	170 CFM	–	8"ø
171	–	300 CFM	–	10"ø
301	–	510 CFM	–	12"ø
511	–	750 CFM	–	14"ø
701	–	1100 CFM	–	16"ø
1101	–	1450 CFM	–	18"ø
1451	–	1900 CFM	–	20"ø

BASED ON WIRE HELIX FLEXIBLE DUCT:
TYPE FLEX–MASTER

UL LISTING:
U–181 / ETL CLASS 1 AIR DUCT
STANDARD CODE:
NFPA 90A AND 90B, BOCA, SBBC
HUD/FHA, MIN PROPERTY STD.
FLAME SPREAD.....LESS.THAN 25
SMOKE DEVELOPE.....LESS.THAN 50

MIN R8.0 FOR ATTIC/UNCONDITION SPACE.
MIN R6.0 FOR RETURN CONDITIONED SPACE.

MANUFACTURER IS TO BE USED AS A BASIS FOR DESIGN. EQUAL IS APPROVED.

AIR DISTRIBUTION DEVICE SCHEDULE (BASED ON PRICE)

NOTES:
1. SYMBOL KEY –
   FIRST LETTER: S–SUPPLY R–RETURN E–EXHAUST T–TRANSFER.
   SECOND LETTER: D–DIFFUSER R–REGISTER G–GRILLE A–ADJUSTABLE SLOT
2. BORDER STYLE – REFER TO REFLECTED CEILING PLAN
3. DAMPERS –
   OPERABLE FROM FACE OB: OPPOSED
   BLADE ROB: RADIAL OPPOSED BLADE B: BUTTERFLY

TAG	MODEL	SIZE		MAX CFM	MOUNTING			MATERIAL		ACCESSORIES			NOTE
		FACE	NECK		SOFFIT	CEIL–ING	DUCT	STEEL	ALUM.	DPR:	EQUAL GRID	FIRE DPR.	
SD–1	SPD	24/24	12"ø	500		●		●					2,3,4,5,7,8
SD–2	SPD	24/24	10"ø	200		●		●					2,3,4,5,7,8
SD–3	SPD	12/12	6"ø	80		●		●					1,2,3,4,5,7,8
SR–1	510	14/10	12/8	450	●		●						2,3,4,5,7
RG–1	PDR	24/24	22/22	1350		●		●					2,3,4,5,6,7,9

NOTES:

1. PROVIDE WITH OPPOSED BLADE DAMPER AT AIR DEVICE IF SHOWN ON PLANS.
2. MAX NC LEVEL 30 OR LESS.
3. PROVIDE SQUARE TO ROUND NECK ADAPTOR.
4. SEE ARCHITECTURAL DRAWINGS FOR PAINT AND FINISH.
5. PROVIDE 4–WAY AIR THROW PATTERN UNLESS OTHERWISE NOTED OR INDICATED.
6. PROVIDE INSULATED PLENUM.
7. BORDER TYPE 3 FOR LAY–IN INVERTED TEE.
8. PROVIDE INSULATED BACKS ON ALL DIFFUSERS.
9. PAINT INSIDE RETURN AIR PLENUM FLAT BLACK.

OUTSIDE AIR CALCULATIONS

ROOM NUMBER & NAME	OCCUPIABLE AREA SQ. FT.	NO. OF PEOPLE	REQ'D OA CFM/PERSON	REQ'D OA CFM/SQ FT	REQ'D OSA NEW AHU–1 THRU 4	DIVERSITY	REQ'D OSA NEW AHU–5	EXHAUST FAN
SALES AREA 101	7800	266	7.5	0.12	2931	1465.5 50% (2)		
HALLWAY 102	125	0	0	0.06			7.5	
OFFICE	85	1	5.00	0.06	10.1	10.1		
STOCKROOM	1296	5	7.5	0.12			193	
RESTROOMS 105, 106	130	0	0	0				150
TOTALS	REQUIRED OUTSIDE AIR				0	1475.6	200.5	
	PROVIDE OUTSIDE AIR				0	1600	240	

NOTES:

1. ESTIMATED MAXIMUM OCCUPANCY AND REQUIRED OUTSIDE AIR BASED ON THE ASHRAE 62.1–2007.
2. DIVERSITY FACTOR APPLIED PER ASHRAE 62 6.1.3. (INTERMITTENT OR VARIABLE OCCUPANCY).

SF= SQUARE FOOT OR SQUARE FEET — THE SF IS THE NET OCCUPIABLE SPACE, MINUS SHELVES, COLUMNS, BOOKCASES, AND THE LIKE.

EXHAUST FAN SCHEDULE

PLAN MARK	MANUFACTURER	MODEL NUMBER	AREA SERVED	CFM	E.S.P.(IN)	ELEC. WATTS	DRIVE	RPM	ELECTRICAL	MISC. CONTROLS	REMARKS
EF–1	BROAN	XB80	MEN 105	75	0.15"	5.80	DIRECT	–	120V/1PH	WALL SWITCH	1,2,3,4,5
EF–2	BROAN	XB80	WOMEN 106	75	0.15"	5.80	DIRECT	–	120V/1PH	WALL SWITCH	1,2,3,4,5

REMARKS:
1. PROVIDE ROOF VENT CAP WITH BIRDSCREEN AND BACKDRAFT DAMPER. VENT FOR EXHAUST DUCT, SHALL BE A MINIMUM 36" HIGH ABOVE ROOF SURFACE.
2. PROVIDE FACTORY INSTALLED AND WIRED SPEED CONTROLLER.
3. INTERLOCK WITH LIGHTS BY ELECTRICAL CONTRACTOR.
4. FAN SHALL BE SUPPLIED WITH FACTORY WHITE GRILLE.
5. PROVIDE WITH MOUNTING HARDWARE AND ISOLATOR KIT.

THERMOSTAT SCHEDULE

MARK	SERVICE & LOCATION	OCCUPIED		UNOCCUPIED		REMARKS
		COOLING	HEATING	COOLING	HEATING	
AHU'S 1,2,3,4	SALES AREA	74	70	78	85	1
AHU–5	STORAGE, OFFICE, RESTROOMS	74	70	78	85	1

NOTES:
1. CONTRACTOR SHALL COORDINATE EXACT OPERATIONAL TIMES WITH OWNER/MANAGER PRIOR TO PROGRAMMING.

BAROMETRIC RELIEF DAMPER SCHEDULE

MARK	VR–1,2,3,4
MANUFACTURER	GREENHECK
MODEL No.	BR–10
SERVICE	SALES–STOCK
MAXIMUM VELOCITY (FT/M)	2000
MAXIMUM BACK PRESSURE in.wg	2
START–OPEN PRESSURE in.wg	0.05
DIMENSIONS (L"xW"xH")	46x46X5
WEIGHT (LBS)	–
REMARKS	A,B,C,D

SPLIT SYSTEM HEAT PUMP UNIT SCHEDULE

AIR HANDLING UNIT:					
TAG	AHU–1/CU–1	AHU–2/CU–2	AHU–3/CU–3	AHU–4/CU–4	AHU–5/CU–5
TONNAGE	6	6	6	6	6
SYSTEM TYPE	SPLIT	SPLIT	SPLIT	SPLIT	SPLIT
SUPPLY AIR (CFM)	2400	2400	2400	2400	2400
OUTSIDE AIR (CFM)	400	400	400	400	240
PERCENT OF OUTSIDE AIR	16.66%	16.66%	16.66%	16.66%	10%
ENT. AIR TEMP. (DB/WB)	80/67	80/67	80/67	80/67	80/67
CONDENSER ENT. TEMP.	95	95	95	95	95
TOTAL COOLING (MBTUH)	74.9	74.9	74.9	74.9	74.9
SENSIBLE COOLING (MBTUH)	62.4	62.4	62.4	62.4	62.4
DRIVE TYPE	DIRECT	DIRECT	DIRECT	DIRECT	DIRECT
MANUFACTURER	CARRIER	CARRIER	CARRIER	CARRIER	CARRIER
AHU MODEL NO.	40RUQA07A2A6	40RUQA07A2A6	40RUQA07A2A6	40RUQA07A2A6	40RUQA07A2A6
MOTOR HP	1.4	1.4	1.4	1.4	1.4
UNIT TOTAL S.P.	0.79	0.79	0.79	0.79	0.79
VOLTS/PH	208/3	208/3	208/3	208/3	208/3
MCA/MAX FUSE	34.7/35	34.7/35	34.7/35	34.7/35	34.7/35
NET WEIGHT	584	584	584	584	584
HEATER:					
KW	10.0	10.0	10.0	10.0	10.0
VOLTS/PH	208/3	208/3	208/3	208/3	208/3
CONDENSING UNIT:					
REFRIGERANT	R–410–A	R–410–A	R–410–A	R–410–A	R–410–A
NUMBER OF COMPRESSORS	1 SCROLL	1 SCROLL	1 SCROLL	1 SCROLL	1 SCROLL
STAGES	1	1	1	1	1
VOLT/PHASE	208/3	208/3	208/3	208/3	208/3
MCA/MAX FUSE	27/45	27/45	27/45	27/45	27/45
RUNNING LOAD AMPS COMPRESSOR	19	19	19	19	19
LOCKED ROTOR AMPS COMPRESSOR	123	123	123	123	123
FANS FL AMPS	0.7	0.7	0.7	0.7	0.7
FANS HP	–	–	–	–	–
MANUFACTURER	CARRIER	CARRIER	CARRIER	CARRIER	CARRIER
CU MODEL NUMBER	38AUQA07A0A5	38AUQA07A0A5	38AUQA07A0A5	38AUQA07A0A5	38AUQA07A0A5
SYSTEM SEER/EER	12.6	12.6	12.6	12.6	12.6
THERMOSTAT	–	–	–	–	–
OPERATING WEIGHT	389	389	389	389	389

NOTES FOR SPLIT SYSTEM SCHEDULE

NOTES:

1. MECHANICAL CONTRACTOR TO PROVIDE THERMOSTATS, TRANSFORMERS AND 24 VOLT CONTROL WIRING, ELECTRICAL CONTRACTOR SHALL PROVIDE POWER WIRING.
2. THERMOSTATS MUST BE ABLE TO SIGNAL MODULATING MOTORIZED OUTDOOR AIR DAMPER. CONTRACTOR IS RESPONSIBLE TO PURCHASE, INSTALL AND INTERLOCK OUTDOOR AIR DAMPER AND ACTUATOR.
3. EXTERNAL STATIC PRESSURE AVAILABLE AFTER COIL, FAN CASING AND CLEAN FILTER. (0.70") HIGHER PRESSURE IS DUE TO ROUGHNESS OF FLEXDUCT.
4. REFRIGERANT LINES AND INSULATION SHALL BE SIZED AND INSTALLED IN STRICT ACCORDANCE WITH MANUFACTURER'S RECOMMENDATIONS. PROVIDE SUBMITTALS ON INSULATION WITH EQUIPMENT SUBMITTALS.
5. ALL RATINGS ARE BASED ON CONDITIONS OF 95 DEG.F OUTSIDE AIR TEMPERATURE AND ENTRANCE AIR 80 DEG. D.B. AND 67 DEG. W.B. TO EVAPORATOR COIL.
6. IF REQUIRED INCLUDE ACCESSORIES NECESSARY FOR CARRIER LONG LINE APPLICATIONS. FOLLOW CARRIER LONG LINE APPLICATION GUIDELINES.
7. PROVIDE SOLID STATE HEAD PRESSURE CONTROL ON CONDENSER FAN(S) FOR LOW AMBIENT OPERATION.
8. PROVIDE 5 MINUTE TIME DELAY TO PREVENT COMPRESSOR SHORT CYCLING.
9. PROVIDE CONDENSATE DRAIN 'P' TRAP MINIMUM 4" DEEP, OR TWICE THE TOTAL STATIC PRESSURE, WHICHEVER IS GREATER.
10. COMPRESSOR SHALL HAVE 5–YEAR WARRANTY, ALL OTHER EQUIPMENT SHALL HAVE MINIMUM 1 YEAR WARRANTY.
11. PROVIDE UNITS WITH SINGLE POINT ELECTRICAL CONNECTION. PROVIDE FIELD INSTALLED DISCONNECT SWITCH.
12. CONTRACTOR SHALL PROVIDE AND MAINTAIN ALL UNITS WITH MANUFACTURER'S RECOMMENDED CLEARANCES FOR UNIT SERVICE.
13. PROVIDE UNITS WITH ALL SUPPORTS AND MOUNTING HARDWARE, REFRIGERANT LINE SETS AND UNIT STAND–OFF KIT.
14. UNIT SHALL BE FURNISHED WITH TWO SETS OF STANDARD MERV–6 FILTERS

INTERPLAN PLLC

ARCHITECTURE
ENGINEERING
INTERIOR DESIGN
PROJECT MANAGEMENT

AA 003420
CA 8660

604 COURTLAND STREET
SUITE 100
ORLANDO, FLORIDA 32804
PH 407.645.5008
FX 407.629.9124

SEAL:

THIS DOCUMENT IS NOT FOR REGULATORY APPROVAL, PERMITTING, OR CONSTRUCTION.

NO DATE REMARKS
REVISIONS

SHELL BUILDING for DOLLAR TREE

N HWY 19 & CR 44
EUSTIS, FL

PROJECT NO: 2018.0328
DATE: 08-27-2018

M2.0
MECHANICAL SCHEDULES

CHECKED: AS DRAWN: AE

COPYRIGHT © 2018 INTERPLAN PLLC FILE:S:\SERVER\DOCS\PROPERTIES\B-K\DOLLAR TREE\N HWY 19 & CR 44 EUSTIS\ARCHITECT\MECHANICAL\M2.0 SCHEDULES.DWG LAYOUT:M2.0 SCHEDULES XREF:XREF\DOCS\DOCS\TB\TB\TB

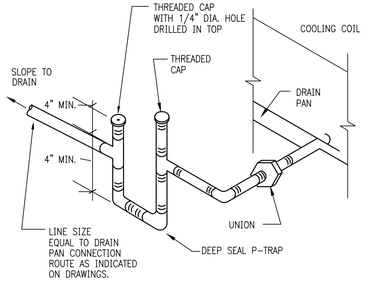

1 CONDENSATE P-TRAP DETAIL NTS

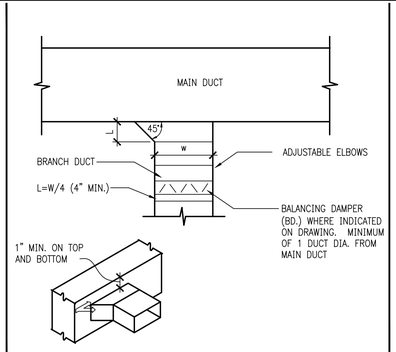

2 RECTANGULAR BRANCH CONNECT NTS

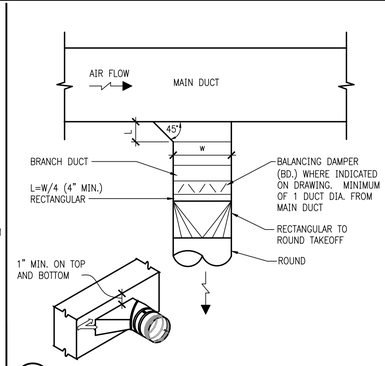

3 ROUND BRANCH CONNECTION NTS

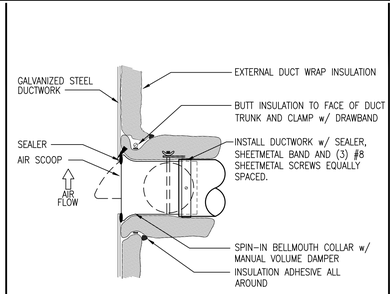

4 CONNECTION DUCT FITTING DETAIL NTS

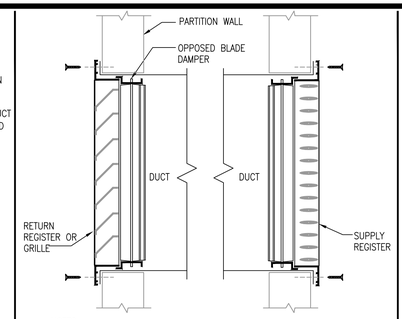

NOTES:
1. WHERE MANUFACTURER'S INSTALLATION INSTRUCTIONS EXCEED THE REQUIREMENTS OF THIS DETAIL, THEY SHALL BE FOLLOWED.

5 SIDEWALL SUPPLY REGISTER AND RETURN GRILLE DETAIL NTS

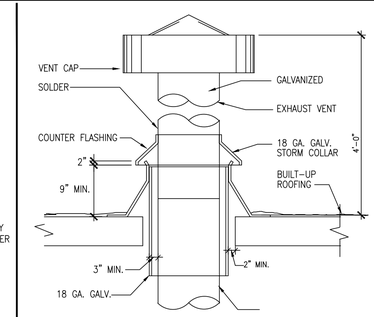

6 EXHAUST VENT THRU ROOF NTS

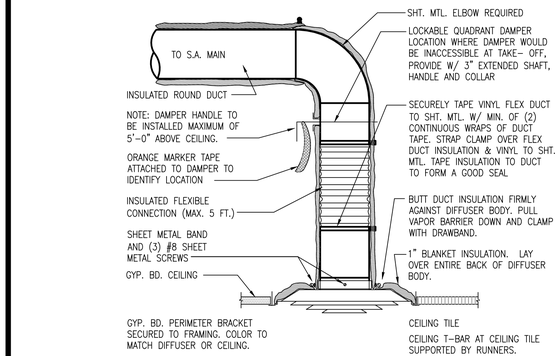

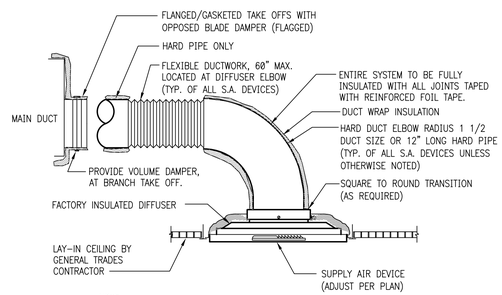

NOTE:
INSTALLATION SIMILAR FOR GYP. BOARD CEILING

7 CONNECTION DIFFUSER DETAIL NTS

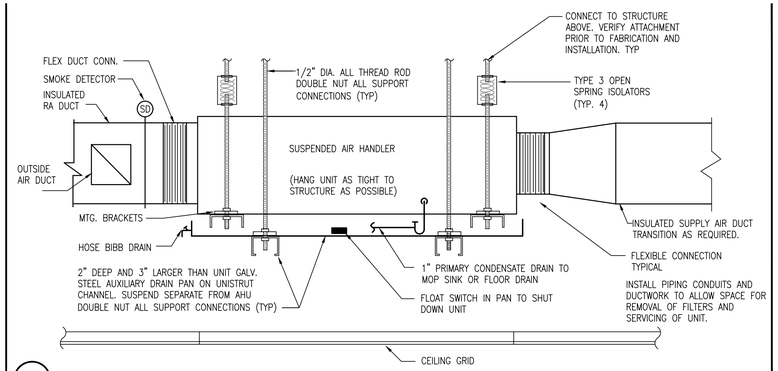

8 ABOVE CEILING AIR HANDLER UNIT (AHU) DETAIL NTS

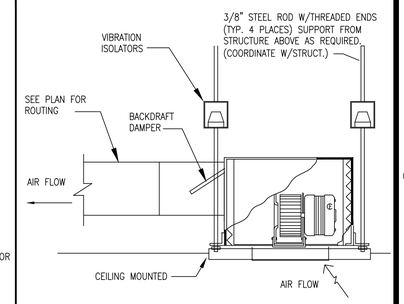

9 CABINET EXHAUST FAN DETAIL NTS

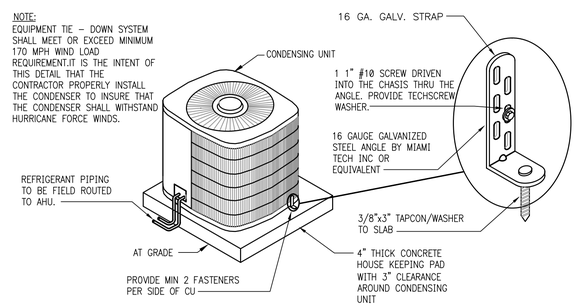

10 CONDENSER TIE-DOWN DETAIL NTS

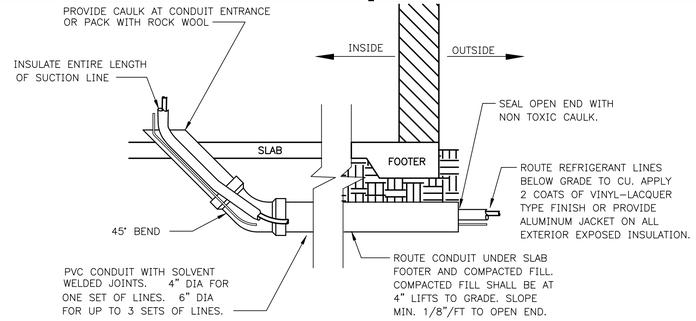

11 UNDERGROUND REFRIGERANT LINES NTS

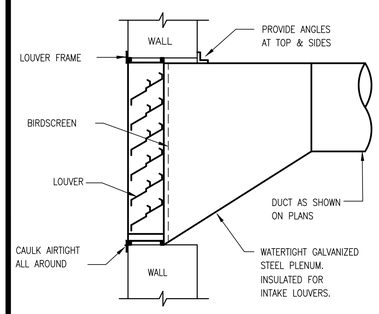

12 LOUVER MOUNTING DETAIL NTS

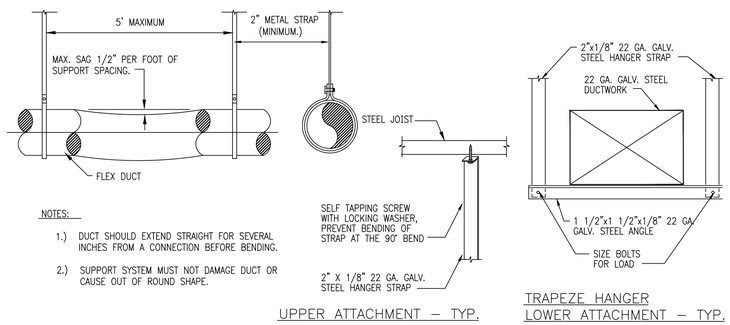

NOTES:

1.) DUCT SHOULD EXTEND STRAIGHT FOR SEVERAL INCHES FROM A CONNECTION BEFORE BENDING.

2.) SUPPORT SYSTEM MUST NOT DAMAGE DUCT OR CAUSE OUT OF ROUND SHAPE.

UPPER ATTACHMENT – TYP.

TRAPEZE HANGER LOWER ATTACHMENT – TYP.

13 TYPICAL DUCT HANGING DETAIL NTS

INTERPLAN PLLC
ARCHITECTURE
ENGINEERING
INTERIOR DESIGN
PROJECT MANAGEMENT

AA 003420
CA 8660

604 COURTLAND STREET
SUITE 100
ORLANDO, FLORIDA 32804
PH 407.645.5008
FX 407.629.9124

SEAL:

THIS DOCUMENT IS NOT FOR REGULATORY APPROVAL, PERMITTING, OR CONSTRUCTION.

NO	DATE	REMARKS

REVISIONS

SHELL BUILDING for DOLLAR TREE

N HWY 19 & CR 44
EUSTIS, FL

PROJECT NO: 2018.0328
DATE: 08-27-2018

M3.0

MECHANICAL DETAIL

CHECKED: AS DRAWN: AE

COPYRIGHT © 2018 INTERPLAN PLLC

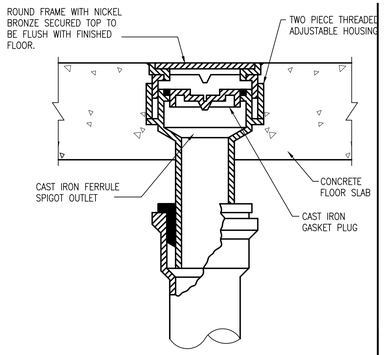

1 CLEAN OUT DETAIL NTS

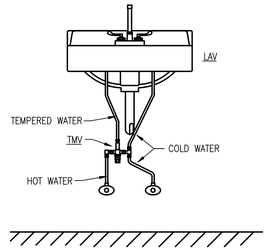

NOTE: SET TEMPERED WATER TEMPERATURE TO 110°F MAX.

2 THERMAL MIXING VALVE DETAIL NTS

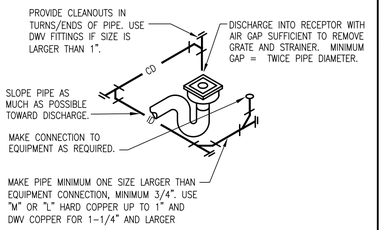

3 INDIRECT DRAIN DETAIL NTS

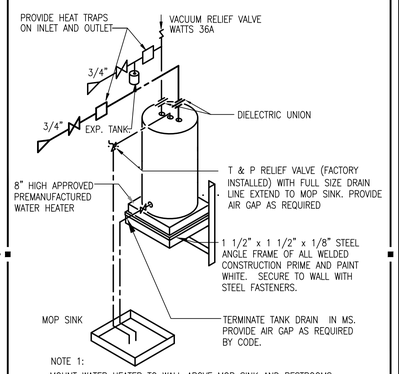

NOTE 1:
MOUNT WATER HEATER TO WALL ABOVE MOP SINK AND RESTROOMS 6'-0" AFF. PROVIDE ADEQUATE WALL BRACING TO SUPPORT WATER HEATER & PLATFORM

NOTE 2:
ALL WATER PIPING INSIDE BUILDING SHALL BE INSULATED

PROVIDE WATTS MODEL DET-5 EXPANSION TANK IN COLD WATER LINE ON THE TANK SIDE OF THE COLD WATER SHUTOFF VALVE.

5 WATER HEATER DETAIL NTS

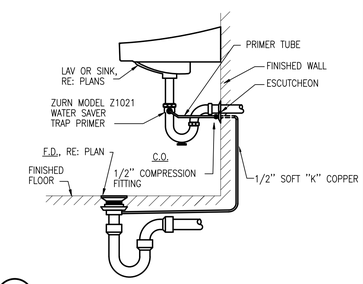

4 TRAP PRIMER DETAIL NTS

PLUMBING SPECIFICATIONS

1. ALL WORKMANSHIP AND MATERIALS SHALL BE IN STRICT ACCORDANCE WITH APPLICABLE LOCAL CODES, RULES AND ORDINANCES.
2. PLUMBING SYSTEMS SCOPE OF WORK TO CONSIST OF THE FOLLOWING:
   2.1. FIELD VERIFICATION OF EXISTING CONDITIONS
   2.2. WASTE AND VENT SYSTEM
   2.3. DOMESTIC HOT AND COLD WATER SYSTEMS
   2.4. PLUMBING CONNECTIONS TO ALL EQUIPMENT PROVIDED BY OTHERS AS REQUIRED
3. PLUMBING CONTRACTOR SHALL VISIT THE JOB SITE AND THOROUGHLY FAMILIARIZE HIMSELF WITH ALL EXISTING CONDITIONS.
4. ALL MATERIALS SHALL BE NEW.
5. ALL WORK SHALL BE PERFORMED BY A LICENSED PLUMBING CONTRACTOR IN A FIRST CLASS WORKMANLIKE MANNER. THE COMPLETED SYSTEM SHALL BE FULLY OPERATIVE. ALL EXCAVATION AND BACKFILL AS REQUIRED FOR THIS PHASE OF CONSTRUCTION SHALL BE A PART OF THIS CONTRACT.
6. REQUIRED INSURANCE SHALL BE PROVIDED BY THE PLUMBING CONTRACTOR FOR PROTECTION AGAINST PUBLIC LIABILITY AND PROPERTY DAMAGE FOR THE DURATION OF THE WORK.
7. PLUMBING CONTRACTOR SHALL SECURE AND PAY FOR ALL PERMITS, FEES, INSPECTION AND TESTS, PLUMBING CONTRACTOR TO OBTAIN PERMIT AND APPROVED SUBMITTALS PRIOR TO BEGINNING WORK OR ORDERING EQUIPMENT. PLUMBING CONTRACTOR MUST BE PRESENT FOR ALL INSPECTIONS OF HIS WORK BY REGULATORY AUTHORITIES.
8. DRAWINGS ARE DIAGRAMMATIC. DO NOT SCALE FOR THE EXACT LOCATION OF FIXTURES, PIPING, EQUIPMENT, ETC.
9. ALL WORK SHALL BE COORDINATED WITH OTHER TRADES TO AVOID INTERFERENCE WITH THE PROGRESS OF CONSTRUCTION. REPORT ANY DISCREPANCY TO ENGINEER/ARCHITECT PRIOR TO BEGINNING CONSTRUCTION.
10. VERIFY LOCATION, SIZE, DIRECTION OF FLOW AND INVERTS OF ALL EXISTING UTILITIES PRIOR TO BEGINNING OF CONSTRUCTION. ADVISE ENGINEER OF ANY DISCREPANCIES.
11. WATER DISTRIBUTION PIPING ABOVE AND BELOW GROUND SHALL BE TYPE "L" COPPER W/ LEAD FREE SOLDER JOINTS. COORDINATE WITH LOCAL JURISDICTION FOR ADDITIONAL REQUIREMENTS.
12. ALL FIXTURES MUST BE PROVIDED WITH READILY ACCESSIBLE STOPS AND APPROPRIATELY MARKED ACCESS PANELS. COORDINATE LOCATIONS WITH GENERAL CONTRACTOR PRIOR TO INSTALLATION.
13. FURNISH AND INSTALL APPROVED WATER HAMMER ARRESTORS FOR ALL (GROUP) PLUMBING FIXTURES, SIZED AND LOCATED PER MANUF.'S INSTALLATION INSTRUCTIONS AND WH-PDI 201. AIR CHAMBERS CAN BE USED AS AN ALTERNATE PROVIDED THAT THEY ARE ACCESSIBLE AND RECHARGABLE PER WH-PDI 201 AND APPROVED BY THE LOCAL AUTHORITY/CODE. FURNISH AND INSTALL APPROVED AIR CHAMBERS FOR ALL MAINS AND RISERS AT THE TOP, ACCESSIBLE AND RECHARGABLE PER WH-PDI 201 AND THE LOCAL AUTHORITY/CODE.
14. DIELECTRIC COUPLINGS ARE REQUIRED BETWEEN ALL DISSIMILAR METAL IN PIPING AND EQUIPMENT CONNECTIONS.
15. ISOLATE COPPER PIPE FROM HANGER OR SUPPORTS WITH ISOLATOR PADS OR MATERIAL. ALL FIRE RATED FLOOR AND WALL PENETRATIONS SHALL BE PROPERLY PROTECTED FROM FIRE, SMOKE AND WATER PENETRATION BY FILLING VOIDS BETWEEN PIPE AND WALL/FLOOR SLEEVES WITH FIRE RATED FOAM, TO ACHIEVE THE SAME RATING AS WALLS OR FLOORS AS PART OF THE PLUMBER'S WORK.
16. PLUMBING CONTRACTOR SHALL GUARANTEE ALL MATERIALS AND WORKMANSHIP FREE FROM DEFECTS FOR A PERIOD OF NOT LESS THAN ONE (1) YEAR FROM DATE OF ACCEPTANCE BY OWNER. CORRECTION OF ANY DEFECTS SHALL BE COMPLETED WITHOUT ADDITIONAL CHARGE AND SHALL INCLUDE REPLACEMENT OR REPAIR OF ANY OTHER PHASE OF THE INSTALLATION WHICH MAY HAVE BEEN DAMAGED.
17. PROVIDE ACCESS PANELS FOR ALL CONCEALED VALVES AND ALL WATER HAMMER ARRESTORS. ACCESS PANELS IN RATED WALLS MUST MAINTAIN THE SAME RATING AND MUST MATCH THE FINISH OF THE WALL IN WHICH IT IS INSTALLED.
18. PROVIDE CHROME PLATED COMBINATION COVER PLATE AND CLEANOUT PLUG OR ACCESS PANEL FOR ALL WALL CLEANOUTS.
19. ALL CONTROL VALVES SHALL BE TAGGED AND MARKED. A REPRODUCIBLE DIAGRAM LOCATING ALL VALVES SHALL BE PROVIDED FOR OWNER/OPERATOR.
20. ALL CONDENSATE DRAIN PIPING SHALL BE TYPE "L" COPPER WITH 1" THICK ARMAFLEX INSULATION MAY BE USED IN LOCATIONS WHERE ALLOWED BY LOCAL CODES.
21. PROVIDE ANGLE STOPS ON ALL WATER SERVICE LINES TO FIXTURES FOR INDIVIDUAL SHUT-OFF.
22. WATER PIPING INSULATION SHALL BE 1" THICK ARMAFLEX INSTALLED IN ACCORDANCE WITH MANUFACTURERS INSTRUCTIONS FOR ALL HOT WATER PIPING. WHERE DOMESTIC WATER TEMPERATURES CAN CAUSE SWEATING ALL COLD WATER PIPING SHALL BE INSULATED WITH ARMAFLEX INSULATION.
23. PROVIDE SHUT-OFF VALVES ON ALL HOSE BIBS PER FPC 606.2(2).
24. PROVIDE CHROME PLATED ESCUTCHEONS AT ALL PIPING PENETRATIONS THRU WALLS.

PLUMBING FIXTURE SCHEDULE

MARK	FIXTURE TYPE	MANUFACTURER & MODEL NO.	FIXTURE CONNECTIONS				REMARKS
			CW	HW	W	V	
FD	FLOOR DRAIN	ZURN MODEL #Z-415	1/2"	---	3"	2"	TYPE "N" STRAINER. PROVIDE WITH COMPLETE BODY ASSEMBLY WITH TRAP PRIMER CONNECTION.
FCO	FLOOR CLEANOUT	ZURN MODEL #1454	---	---	---	---	SIZE PER PIPING LATERAL, 4" MAX.
WC	HANDICAP WATER CLOSET	ZURN MODEL Z5560 17" H ELONGATED PRESSURE ASSIST 1.6 G.P.F. SIPHON JET	1/2"	---	3"	2"	FURNISH ADA CLOSET & TANK, ADA OPEN FRONT SEAT, FLOOR FLANGE, CLOSET BOLTS & CAPS, WAX RING, SUPPLY STOP & TUBE. FLUSH CONTROL MUST BE LOCATED ON THE WIDE SIDE OF THE WC (SIDE OPPOSITE THE WALL).
LAV	HANDICAP WALL HUNG LAVATORY	ZURN MODEL NO. Z5340 WITH 1/2 GPM FLOW RESTRICTOR. FAUCET HOLES ON 4" CENTERS	1/2"	1/2"	1 1/2"	2"	FURNISH LAVATORY, ZURN Z812B4 GOOSE NECK FAUCET WITH LEVER HANDLES, WALL HANGER KIT, SUPPLY STOPS & TUBES, DRAIN KIT & TAILPIECE
DF	BI-LEVEL HANDICAP DRINKING FOUNTAIN	ELKAY VRCHDTL8SC	1/2"	---	1 1/2"	1 1/2"	FURNISH STANDARD CABINET FINISH FOUNTAIN, SUPPLY STOP & TUBE, DRAIN KIT, AND WALL HANGER KIT
WH	ELECTRIC WATER HEATER	RHEEM ELECTRIC WATER HEATER MODEL NO. EGSP10 LOWBOY	3/4"	3/4"	---	---	10 GAL. STORAGE, 3.0KW, 208V, 12GPH REC 100°F RISE.
TP	TRAP PRIMER	ZURN MODEL NO. Z1021 WATER SAVER TRAP PRIMER	1/2"	---	1 1/2"	---	SEE DETAIL THIS SHEET
MS	MOP SINK	ZURN MODEL Z1996-36-SF 24"X36" COMPOSITE MOP SINK	1/2"	1/2"	3	2"	ZURN MODEL 1996 -SF SERVICE FAUCET INCLUDED WITH MOP SINK. ACCESSORIES TO INCLUDE STAIN.STL. WALL GUARDS AND 3 CLAMP MOP HANGER.
HB	HOSE BIB	WOODFORD FREEZE PROOF HOSE BIB MODEL NO. B65 OR B24	3/4"	-	-	-	PROVIDE WITH AUTOMATIC DRAINING ANTI-SIPHON VACUUM BREAKER.
FS	FLOOR SINK	J.R. SMITH 3100					CAST IRON BODY WITH 8" SQ. 3/4" GRATE AND STRAINER

NOTE:

INSTALL ALL PLUMBING FIXTURES TO BE FULLY ACCESSIBLE TO INDIVIDUALS WITH DISABILITIES IN ACCORDANCE WITH LATEST ISSUE OF THE AMERICANS WITH DISABILITIES ACT AND ALL CURRENT STATE AND LOCAL CODES. - "PROVIDING ACCESSIBILITY AND USABILITY FOR PHYSICALLY HANDICAPPED PEOPLE" AND/OR GOVERNING CODES. - ALL PLUMBING FIXTURES EQUIPMENT, TRIM, & FITTINGS SHALL COMPLY WITH LOCAL, STATE, AND FEDERAL REGULATIONS AND CODES, INCLUDING, BUT NOT LIMITED TO, WATER AND ENERGY CONSERVATION CODES. THE SCHEDULED AND/OR SPECIFIED PLUMBING FIXTURES AND EQUIPMENT REPRESENT THE MINIMUM CRITERIA AND SHALL BE THE BASIS FOR THE CONTRACTOR'S BASE BID. IF THE SCHEDULED OR SPECIFIED FIXTURES OR EQUIPMENT DO NOT COMPLY WITH GOVERNING CODES OR REGULATIONS IN ALL RESPECTS, THE CONTRACTOR SHALL PROVIDE AN ALTERNATE BID FOR COMPLYING FIXTURES, EQUIPMENT, TRIM, OR FITTINGS. THE ABSENCE OF AN ALTERNATE BID SHALL BE CONSTRUED TO MEAN THAT THE CONTRACTOR'S BID INCLUDES ALL COSTS NECESSARY TO MEET ALL REGULATIONS & CODES. ALL PIPING AND VALVES BELOW LAVATORY SHALL BE INSULATED WITH PVC LAV GUARDS AND CONFIGURED TO PROTECT AGAINST CONTACT PROVIDED WITH LAV KIT. THERE SHALL BE NO SHARP OR ABRASIVE SURFACES UNDER LAVATORY.

FIELD VERIFY ALL CONDITIONS

NOTE!

AS NOTED IN THE SPECIFICATIONS, ALL WIRING LAYOUTS, PIPING LAYOUTS AND DUCT LAYOUTS ARE SCHEMATIC. EXACT LOCATIONS SHALL BE DETERMINED BY THE CONSTRUCTION AND STRUCTURE OF THE BUILDING AND SHALL BE VERIFIED AND COORDINATED IN THE FIELD. EACH TRADE CONTRACTOR SHALL VERIFY WITH THE GENERAL CONTRACTOR THAT HE HAS THOROUGHLY REVIEWED AND COORDINATED ALL LOCATIONS AND ROUTINGS WITH ALL OTHER TRADES PRIOR TO FABRICATION OF CONDUITS, DUCTS, OR PIPING, AND START OF INSTALLATION OF SAME (INCLUDING SPRINKLER PIPING WHEN PRESENT ON JOB). ANY INSTALLATION OR CONSTRUCTION CONFLICTS WHICH OCCUR IN THE FIELD SHALL BE RESOLVED BY THE TRADE CONTRACTOR TO THE SATISFACTION OF THE OWNER AND ARCHITECT AND AT NO EXPENSE TO THE OWNER, ARCHITECT AND/OR GENERAL CONTRACTOR.

THE CONTRACTOR SHALL CONTACT THE ARCHITECT, ENGINEER OR OWNER PRIOR TO BIDDING FOR INTERPRETATIONS AND CLARIFICATIONS OF THE DESIGN AND INCLUDE IN HIS BID ALL COSTS TO MEET THE DESIGN INTENT. CLARIFICATIONS MADE BY THE ARCHITECT, ENGINEER OR OWNER AFTER BIDDING WILL BE FINAL AND SHALL BE IMPLEMENTED AT CONTRACTORS COST.

BIDDING CONTRACTORS SHALL HAVE A WORKING KNOWLEDGE OF LOCAL CODES AND ORDINANCES AND SHALL INCLUDE IN THEIR BIDS THE COSTS FOR ALL WORK INSTALLED IN STRICT ACCORDANCE WITH GOVERNING CODES, THE PLANS AND SPECIFICATIONS NOT WITHSTANDING. THE CONTRACTOR SHALL ALERT ARCHITECT, ENGINEER OR OWNER OF ANY APPARENT DISCREPANCIES BETWEEN GOVERNING CODES AND DESIGN INTENT.

LEGEND (SOME SYMBOLS MAY NOT BE USED)

———	NEW SANITARY WASTE PIPING
—— GW ——	GREASE WASTE PIPING
- - - - - -	VENT PIPING
—— · ——	COLD WATER PIPING
—— · · ——	HOT WATER PIPING (140 DEG.)
—— FW ——	FILTERED WATER PIPING
←- - - - -⊗	INDIRECT WASTE PIPING/CONNECTION
—▷◁—	GATE VALVE
—◺◹—	CHECK VALVE
—⫼—	UNION
(X)	KITCHEN EQUIPMENT ITEM NO.
—— ○ ——	CONDENSATE PIPING
	FLOOR DRAIN
	FLOOR SINK
	FLOOR CLEANOUT
	WALL CLEANOUT
VTR	VENT THRU ROOF
CO	CLEAN OUT
FD	FLOOR DRAIN
FS	FLOOR SINK
HD	HUB DRAIN
AFF	ABOVE FINISH FLOOR

INTERPLAN PLLC
ARCHITECTURE
ENGINEERING
INTERIOR DESIGN
PROJECT MANAGEMENT

AA 003420
CA 8660

604 COURTLAND STREET
SUITE 100
ORLANDO, FLORIDA 32804
PH 407.645.5008
FX 407.629.9124

SEAL:

THIS DOCUMENT IS NOT FOR REGULATORY APPROVAL, PERMITTING, OR CONSTRUCTION.

NO	DATE	REMARKS

REVISIONS

SHELL BUILDING for DOLLAR TREE

N HWY 19 & CR 44
EUSTIS, FL

PROJECT NO: 2018.0328
DATE: 08-27-2018

P0.1

PLUMBING NOTES LEGEND & DETAILS

CHECKED: PD DRAWN: JR

COPYRIGHT © 2018 INTERPLAN PLLC FILE:S:\BIDEX\VDOT\DFW\BLK FOR CONS\HIGHRISE\HIGHRISE\CONCHANGE\BLDG\CAD\CAD\ASCE 7\PB ENG\CAD\ASCE 7\PB ENG\CAD\ASCE 7\PB ENG

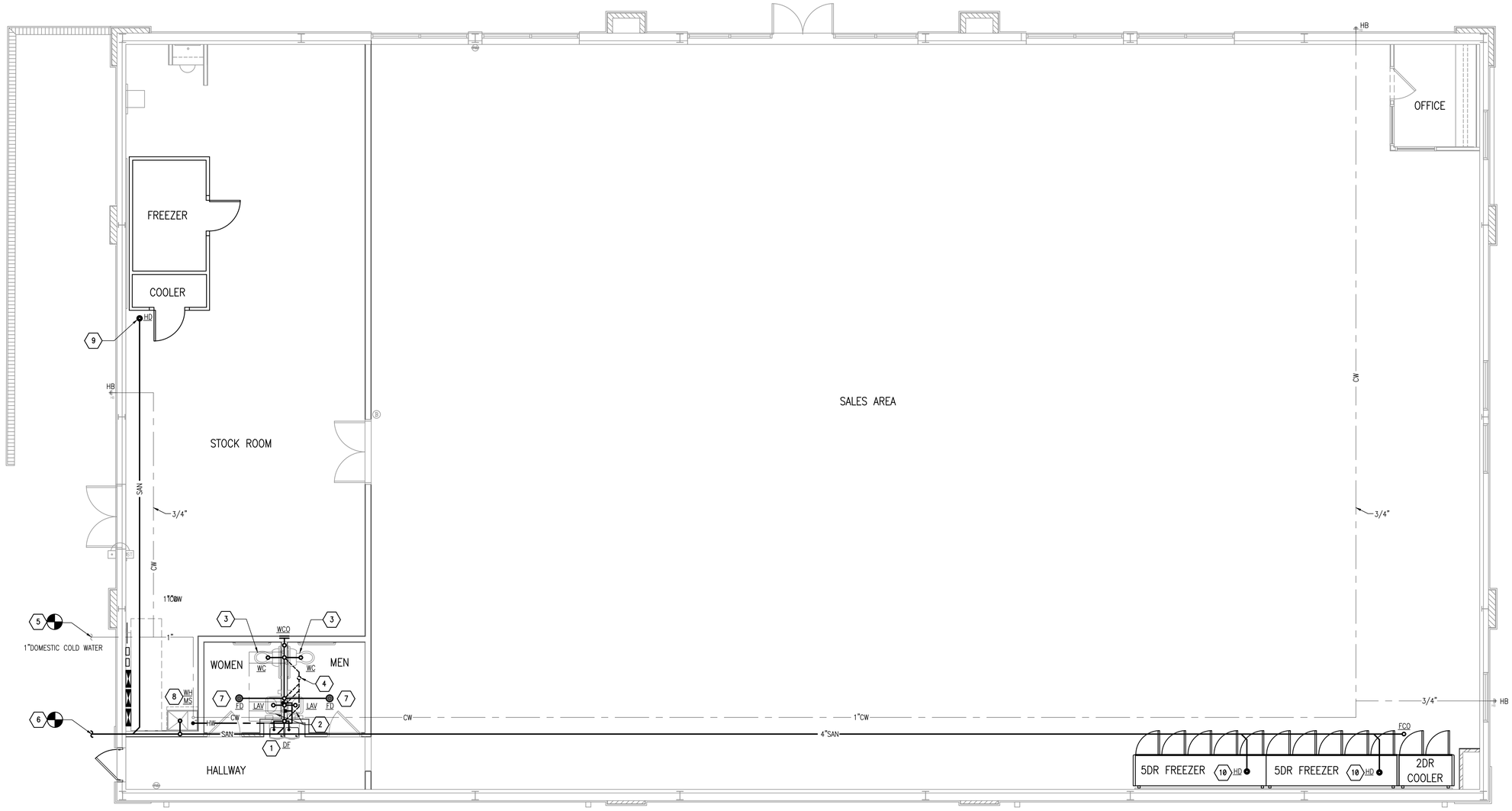

1 PLUMBING FLOOR PLAN 3/16"-1'-0"

NORTH

GENERAL NOTES:

GENERAL NOTES – PLUMBING

1. DRAWINGS ARE DIAGRAMMATIC ONLY AND REPRESENT THE GENERAL SCOPE OF THE WORK. PRIOR TO SUBMITTING BID, VISIT THE JOB SITE TO OBSERVE THE EXISTING CONDITIONS OF THE PROJECT. REVIEW GENERAL NOTES. SPECIFICATIONS AND PLANS FOR ADDITIONAL REQUIREMENTS THAT MAY NOT BE SPECIFICALLY CALLED OUT IN THIS PORTION OF THE CONSTRUCTION DOCUMENTS. NOTIFY ARCHITECT OF ANY CONFLICTS OR DISCREPANCIES PRIOR TO SUBMISSION OF BID.
2. PROVIDE A CONSTRUCTION RECORD SET OF AS BUILT DOCUMENTS TO THE OWNER REFLECTING ANY VARIANCES OF INSTALLED PIPING LOCATIONS OR EQUIPMENT CONTRARY TO THE CONSTRUCTION DOCUMENTS.
3. PROVIDE TO THE OWNER A COPY OF INSPECTION REPORTS AND APPROVAL CERTIFICATES FROM LOCAL AND STATE INSPECTIONS, REFER TO SPECIFICATIONS.
4. INSTALLATION SHALL COMPLY WITH LEGALLY CONSTITUTED CODES AND THE REQUIREMENTS OF AUTHORITIES HAVING JURISDICTION AND ALSO MEET ALL REQUIREMENTS. OBTAIN A COPY OF ALL REQUIREMENTS AND REVIEW PRIOR TO SUBMITTING BID.
5. PLANS AND SPECIFICATION GOVERN WHERE THEY EXCEED CODE REQUIREMENTS.
6. VERIFY LOCATION AND DEPTH OF UTILITIES AT POINTS OF CONNECTION BEFORE START OF PIPING INSTALLATION.
7. REFER TO ARCHITECTURAL PLANS FOR EXACT LOCATION AND MOUNTING HEIGHTS OF PLUMBING FIXTURES.
8. DO NOT SCALE FLOOR PLANS FOR EXACT HORIZONTAL LOCATION OF PIPE ROUTING.
9. INSTALL CONCEALED PIPING TIGHT TO THE STRUCTURE AND AS HIGH AS POSSIBLE. INSTALL EXPOSED PIPING TIGHT TO THE STRUCTURE, WALL OR CEILING AND AS HIGH AS POSSIBLE. COORDINATE WITH OTHER TRADES TO AVOID CONFLICTS.
10. PIPING VALVES SHALL BE LINE SIZE UNLESS OTHERWISE NOTED
11. PIPING IN FINISHED AREAS SHALL BE ROUTED CONCEALED.
12. COORDINATE ALL WORK WITH OTHER TRADES AND CONTRACTORS.
13. REFER TO THROUGH PENETRATION FIRESTOP SYSTEM #W-L-2093 FOR ANY PENETRATION OF THE FIRE RATED WALL WITH CPVC OR PVC PIPES.

PLUMBING PLAN KEYED NOTES

1. FURNISH AND INSTALL DRINKING FOUNTAIN PER LOCAL CODES & PLAN. FIELD VERIFY AND COORDINATE LOCATION.
2. FURNISH AND INSTALL ADA COMPLIANT LAVATORY FIXTURE PER PLANS. CONNECT 1/2" CW, 1/2" HW, 1-1/2" W, AND 2" V TO LAVATORY. PROVIDE ISOLATION VALVES AND FLEXIBLE CONNECTIONS AS NECESSARY FOR A COMPLETE INSTALLATION. INSTALL PER MANUFACTURER'S INSTRUCTIONS. FIELD VERIFY & COORDINATE EXACT LOCATION PRIOR TO BID.
3. FURNISH AND INSTALL ADA COMPLIANT WATER CLOSET FIXTURES PER PLANS. CONNECT NEW 1/2" CW, 4" W, AND 2"V TO WATER CLOSET. PROVIDE ISOLATION VALVES AND FLEXIBLE CONNECTIONS AS NECESSARY FOR A COMPLETE INSTALLATION. SECURE PIPING TO WALL. INSTALL PER MANUFACTURER'S INSTRUCTIONS. FIELD VERIFY & COORDINATE EXACT LOCATION PRIOR TO BID.
4. NEW 4" VENT THROUGH ROOF. MAINTAIN MINIMUM 10' CLEARANCE FROM ANY FRESH AIR INTAKE.
5. NEW 1" DOMESTIC COLD WATER PIPING REFER TO CIVIL DRAWING FOR CONTINUATION. FIELD VERIFY & COORDINATE EXACT LOCATION.
6. CONNECT 4" NEW SANITARY PIPING TO SANITARY. CONTRACTOR TO VERIFY INVERT ELEVATION PRIOR TO CONSTRUCTION ±3 INVERT. VERIFY PIPES DEPTH IS SUFFICIENT TO ALLOW THE NEW WASTE TO BE SLOPED DOWN INTO THE WASTE PIPE. FIELD VERIFY LOCATION OF SANITARY PIPING PRIOR TO BID & CONSTRUCTION.
7. PROVIDE AND INSTALL NEW FLOOR DRAIN IN LOCATION SHOWN AND CONNECT 3"W AND 2" V TO FLOOR DRAIN. FIELD VERIFY & COORDINATE EXACT LOCATION PRIOR TO BID.
8. PROVIDE NEW WATER HEATER ABOVE MOP SINK. MAKE FINAL PLUMBING MODIFICATIONS. INSTALL PER CODE AND MANUFACTURER'S RECOMMENDATIONS. DISCHARGE FROM WATER HEATER TO TERMINATE TO MOP SINK INDIRECTLY WITH AIR GAP.
9. PROVIDE HUB FOR WALK IN COOLER. COORDINATE EXACT LOCATION WITH OWNER PRIOR TO BID.
10. PROVIDE HUB DRAINS FOR COLD FOOD DISPLAYS. COORDINATE EXACT LOCATION WITH EQUIPMENT PRIOR TO BID.

PIPING MATERIAL SPECIFICATIONS

WASTE AND VENT PIPING: SHALL BE SCHEDULE 40 PVC PLASTIC WITH FITTINGS INSTALLED AS RECOMMENDED BY THE MANUFACTURER. NO CELL CORE OR FOAM CORE PVC ALLOWED.

WATER PIPING: CONNECT TO EXISTING WATER PIPING AND PROVIDE A NEW DOMESTIC HOT AND COLD WATER PIPING SYSTEM INSIDE THE BUILDING AS SHOWN ON DRAWINGS. HOT AND COLD WATER PIPING SHALL BE TYPE "L" COPPER TUBING ASTM B-88 WITH WROUGHT COPPER FITTINGS OR SUBSTITUTED ALLOWABLE BY CODE AND SWEAT CONNECTIONS USING LEAD-FREE SOLDER. PROVIDE WATER HAMMER ARRESTERS AT RESTROOMS. FLUSH THE WATER PIPING CLEAR OF DEBRIS AND CLEAN THE AERATORS AND STRAINERS AT THE TERMINATION OF THE INSTALLATION.

VALVES: PLUMBING CONTRACTORS SHALL FURNISH ALL VALVES OF ONE MANUFACTURER, FIGURE NUMBER AND TYPE THROUGHOUT THE ENTIRE INSTALLATION OF THE WORK, UNLESS OTHERWISE SPECIFIED. THE FOLLOWING NUMBERS ARE FROM THE NIBCO CATALOG. VALVES OF REPUTABLE MANUFACTURERS, SUCH AS CRANE CO., WATTS REGULATOR CO., AND WALWORTH CO. WILL BE ACCEPTABLE ALTERNATES, WHERE SHOWN TO BE EQUAL TO THOSE SPECIFIED. INSTALL GATE VALVES

PIPE INSULATION: INSULATE ALL COLD WATER AND CONDENSATE PIPING WITH 1/2", AND HOT WATER PIPING WITH 1", PREFORMED FIBERGLASS WITH ALL-SERVICE JACKET WITH VAPOR BARRIER KNAUF. AT CONTRACTOR'S OPTION, PLENUM-RATED ELASTOMERIC INSULATION (BY ARMSTRONG, RUBATEX OR EQUAL) MAY BE USED.

INTERPLAN PLLC

ARCHITECTURE
ENGINEERING
INTERIOR DESIGN
PROJECT MANAGEMENT

AA 003420
CA 8660

604 COURTLAND STREET
SUITE 100
ORLANDO, FLORIDA 32804
PH 407.645.5008
FX 407.629.9124

SEAL:

THIS DOCUMENT IS NOT FOR REGULATORY APPROVAL, PERMITTING, OR CONSTRUCTION.

NO	DATE	REMARKS

REVISIONS

SHELL BUILDING for DOLLAR TREE

N HWY 19 & CR 44
EUSTIS, FL

PROJECT NO: 2018.0328
DATE: 08-27-2018

P1.0

PLUMBING FLOOR PLAN

CHECKED: PD DRAWN: JR

COPYRIGHT © 2018 INTERPLAN PLLC

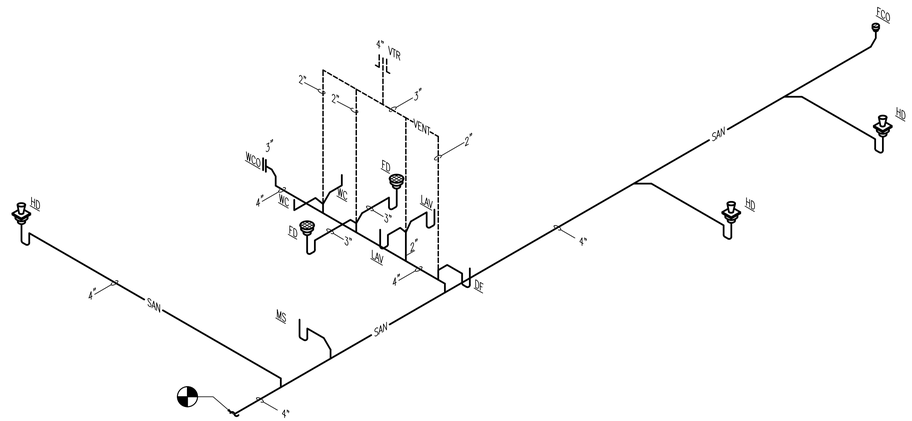

WASTE AND VENT RISER NTS

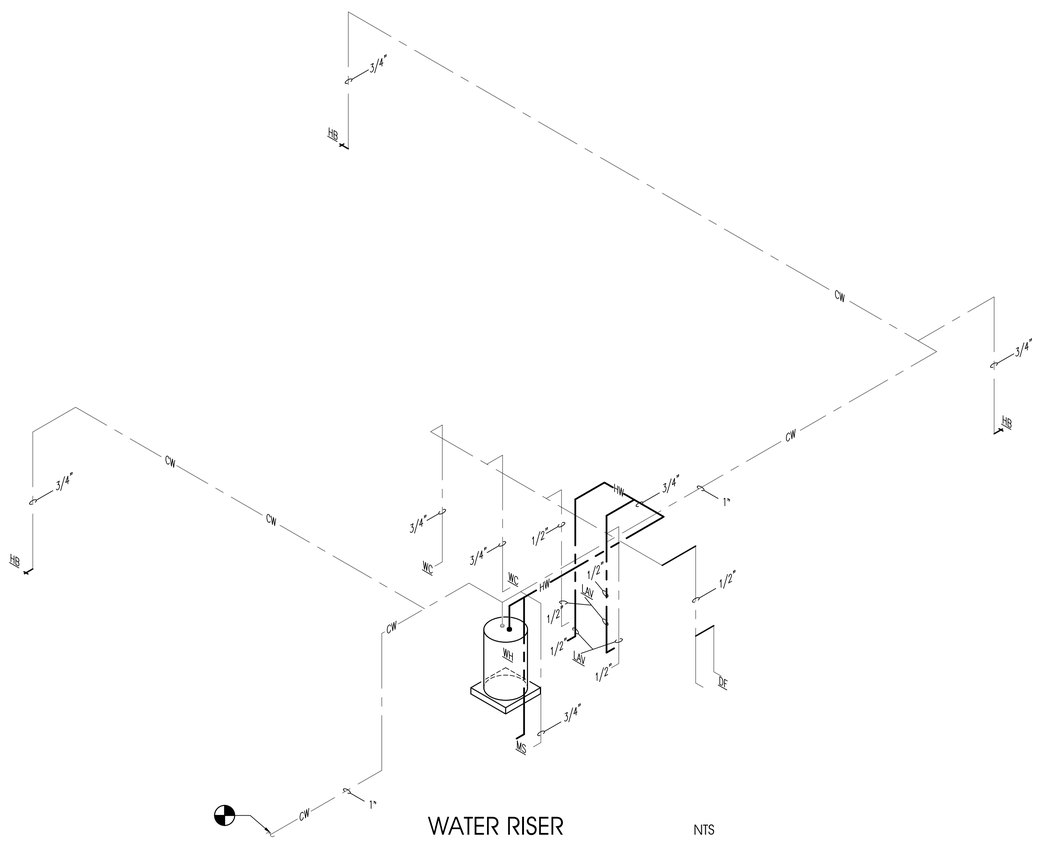

WATER RISER NTS

INTERPLAN PLLC

ARCHITECTURE
ENGINEERING
INTERIOR DESIGN
PROJECT MANAGEMENT

AA 003420
CA 8660

604 COURTLAND STREET
SUITE 100
ORLANDO, FLORIDA 32804
PH 407.645.5008
FX 407.629.9124

SEAL:

THIS DOCUMENT IS NOT FOR REGULATORY APPROVAL, PERMITTING, OR CONSTRUCTION.

NO DATE REMARKS
REVISIONS

SHELL BUILDING for DOLLAR TREE

N HWY 19 & CR 44
EUSTIS, FL

PROJECT NO: 2018.0328
DATE: 08-27-2018

P1.1

PLUMBING RISERS

CHECKED: PD DRAWN: JR

COPYRIGHT © 2018 INTERPLAN PLLC RESERVED.PROPRIETARY & CONFIDENTIAL.THIS STRUCTURE HAS BEEN DESIGNED TO BE CONFORMING TO THE 2010 FLORIDA BUILDING CODE, 5TH EDITION (2014) AND ASCE 7-10 WITH THE FOLLOWING DESIGN PARAMETERS: ULTIMATE WIND SPEED 130 MPH, EXPOSURE CATEGORY B, RISK CATEGORY II, ENCLOSED, GCPI=0.18 WITH INTERNAL PRESSURES +0.18 AND -0.18, SEISMIC DESIGN CATEGORY B, SITE CLASS D, SS=0.183, S1=0.067, SDS=0.195, SD1=0.107, IE=1.0, R=6.5, CD=4.0, SOIL BEARING CAPACITY 2000 PSF, FLOOD ZONE X, FLOOD ELEVATION N/A, FLOOD DESIGN CLASS N/A, SEISMIC DESIGN CATEGORY B, SOIL BEARING CAPACITY 2000 PSF, FLOOD ZONE X, FLOOD ELEVATION N/A, FLOOD DESIGN CLASS N/A.

SECTION 16000 – ELECTRICAL SPECIFICATIONS

GENERAL

I. GENERAL

A. THE CONTRACTOR SHALL FURNISH ALL MATERIAL, LABOR & EQUIP. NECESSARY TO COMPLETELY INSTALL ELECTRICAL & RELATED WORK INDICATED ON THE DRAWINGS AND IN THESE SPECIFICATIONS.

II. CODE

A. ALL EQUIPMENT, WIRING AND THE ENTIRE INSTALLATION SHALL BE IN ACCORDANCE WITH THE APPLICABLE PROVISIONS OF THE LATEST EDITION OF THE NATIONAL ELECTRICAL CODE (N.E.C.), O.S.H.A. REQUIREMENTS, LIFE SAFETY CODE AND ALL APPLICABLE LOCAL AND STATE LAWS AND ORDINANCES.

B. THE CONTRACTOR SHALL PAY ALL INSPECTION FEES AND PURCHASE ALL PERMITS REQUIRED FOR THIS WORK.

III. LOCATION OF EQUIPMENT

A. THE CONTRACTOR SHALL NOTE THAT THE ELECTRICAL DRAWINGS ARE INTENDED TO INDICATE ONLY THE EXTENT DIAGRAMMATICALLY, GENERAL CHARACTER AND LOCATION OF THE WORK. WORK INTENDED, BUT HAVING MINOR DETAILS OBVIOUSLY OMITTED, SHALL BE FURNISHED AND INSTALLED COMPLETE BY THIS CONTRACTOR AT HIS EXPENSE.

B. THE CONTRACTOR SHALL VISIT THE SITE OF THE WORK AND THOROUGHLY FAMILIARIZE HIMSELF WITH ALL EXISTING CONDITIONS, AND SHALL THOROUGHLY REVIEW ALL DRAWINGS, SPECIFICATIONS AND POSSIBLE ADDENDA PRIOR TO BIDDING ON THIS WORK. NO EXTRAS TO HIS CONTRACT WILL BE ALLOWED FOR FAILURE TO COMPLY WITH THIS REQUIREMENT.

IV. ROUGH-IN

A. VERIFY FINAL LOCATIONS FOR ROUGH-INS WITH SHOP DRAWINGS, FIELD MEASUREMENTS AND WITH THE REQUIREMENTS OF THE ACTUAL EQUIPMENT TO BE CONNECTED PRIOR TO ROUGH-IN.

B. REFER TO EQUIPMENT SPECIFICATIONS IN DIVISIONS 2 THROUGH 15 FOR ROUGH-IN REQUIREMENTS.

V. INSTALLATION

A. ALL EQUIPMENT AND MATERIALS SHALL BE INSTALLED IN A NEAT AND FIRST CLASS MANNER, LEVEL AND PLUMB, AND SECURELY SUPPORTED. THE ENTIRE INSTALLATION, AND MANNER OF INSTALLATION SHALL MEET THE COMPLETE SATISFACTION OF THE OWNER'S REPRESENTATIVE OR IT SHALL BE REMOVED AND REWORKED AS DIRECTED BY THE OWNER'S REPRESENTATIVE AT THE CONTRACTOR'S EXPENSE.

B. ALL WIRING SHALL BE IN CONDUIT. THE USE OF E.N.T., BX, NM, ETC. OR PRE-MANUFACTURED CABLE ASSEMBLIES OR ALUMINUM WIRE WILL NOT BE PERMITTED.

C. CO-ORDINATE CONNECTION OF ELECTRICAL SYSTEMS WITH UTILITIES AS INDICATED ON THE DRAWINGS.

VI. CUTTING AND PATCHING

A. ALL CUTTING AND PATCHING REQUIRED FOR INSTALLATION OF ELECTRICAL WORK SHALL BE THE RESPONSIBILITY OF THE ELECTRICAL CONTRACTOR.

B. NO ADDITIONAL COMPENSATION WILL BE AUTHORIZED FOR CUTTING AND PATCHING WORK THAT IS NECESSITATED BY ILL- TIMED, DEFECTIVE OR NON-CONFORMING INSTALLATIONS.

C. CONTRACTOR SHALL VERIFY TRANSFORMER LOCATION AND METERING SCHEME WITH LOCAL UTILITY CO.

VII. ELECTRICAL SUBMITTALS

A. REFER TO THE CONDITIONS OF THE CONTRACT (GENERAL AND SUPPLEMENTARY) AND DIVISION 1 SECTION :SHOP DRAWINGS, PRODUCT DATA, AND SAMPLES FOR SUBMITTAL DEFINITIONS, REQUIREMENTS AND PROCEDURES.

B. IN ADDITION TO THE REQUIREMENTS OF DIVISION
1. THE FOLLOWING APPLIES TO SUBMITTALS OF THIS DIVISION: 1. NO ELECTRICAL EQUIPMENT SHALL BE INSTALLED IN THE PROJECT UNTIL SUBMITTALS HAVE BEEN ACCEPTABLY REVIEWED BY THE OWNERS REPRESENTATIVE AND STAMPED ACCORDINGLY.
2. MAKE ALL ELECTRICAL SUBMITTALS AT ONE TIME AND WITHIN FOURTEEN (14) CALENDAR DAYS OF OWNER'S "NOTICE TO PROCEED"TO THE GENERAL CONTRACTOR.
3. SUBMIT SIX (6) COMPLETE SETS TO OWNER'S REPRESENTATIVE. ONE SET SHALL REMAIN WITH THE OWNER'S REPRESENTATIVE, ONE SET SHALL BE DELIVERED TO THE OWNER AND THE OTHERS WILL BE RETURNED TO THE CONTRACTOR TO DISTRIBUTE AS REQUIRED.
4. IF ANY ITEM IN THE SUBMITTAL IS "NOT ACCEPTABLE" FOR ANY REASON, IT SHALL AUTOMATICALLY VOID THE ENTIRE SET. CONTRACTOR SHALL RE-SUBMIT AS REQUIRED TO OBTAIN ACCEPTANCE OF ALL ITEMS.
5. EACH SET SHALL BE BOUND AND INDEXED INTO GROUPS SUCH AS FIXTURES, PANELS, WIRING DEVICES, DISCONNECT SWITCHES, ETC..
6. EACH SET SHALL BE IDENTICAL.
7. SUBMITTALS OF CUT SHEET AND TECHANICAL DATA SHALL BE MADE ON THE FOLLOWING ITEMS : LIGHTING EQUIPMENT, PANELS, WIRING DEVICES, DISCONNECT SWITCHES, MOTOR STARTERS, TRANSFORMERS. ALL SUBMITTALS SHALL BE ORIGINALS, COPIES OF CUT SHEETS ARE NOT ACCEPTABLE.
8. IN CASE OF DISCREPANCIES BETWEEN SETS OF SUBMITTALS, THE SET RETAINED BY THE OWNER'S REPRESENTATIVE SHALL HAVE PRECEDENCE.

VIII. IDENTIFICATION NAMEPLATES

A. FURNISH AND INSTALL NAMEPLATES ON ALL ITEMS OF ELECTRICAL EQUIPMENT. NAMEPLATES SHALL BE MADE FROM WHITE ENGRAVING STOCK WITH BLACK LETTERS AND BLACK FOUR EDGE BEVEL. WORDING SHALL SUITABLY DESCRIBE ITEMS AND NAMEPLATES SHALL BE ATTACHED USING PROPER SIZE AND TYPE STAINLESS STEEL BOLTS. GLUE ON, TAPE ON OR TAPE TYPE NAMEPLATES ARE NOT ACCEPTABLE.

IX. WARRANTIES

A. GUARANTEE ALL ELECTRICAL SYSTEM MATERIALS AND WORKMANSHIP TO BE FREE FROM DEFECTS FOR A PERIOD OF ONE (1) YEAR FROM THE DATE OF FINAL ACCEPTANCE AND PROPERLY CORRECT LATENT DEFECTS ARISING WITHIN THIS PERIOD UPON NOTIFICATION BY THE OWNER'S REPRESENTATIVE WITHOUT ADDITIONAL COMPENSATION

XI. CLEANING

A. REGULARLY REMOVE REFUSE AND DEBRIS ACCUMULATING FROM ELECTRICAL CONSTRUCTION AND PRIOR TO ACCEPTANCE OF THIS WORK, LEAVE THE PREMISES "BROOM CLEAN" INSOFAR AS AFFECTED BY ELECTRICAL WORK.

B. CLEAN ALL LIGHT FIXTURES, LAMPS AND LENSES AND PANELBOARD INTERIORS PRIOR TO FINAL ACCEPTANCE.

XII. TEST AND ADJUSTMENT

A. FURNISH ALL LABOR, INSTRUMENTS, AND OTHER SERVICES REQUIRED FOR COMPLETE AND SATISFACTORY TEST AND ADJUSTMENT OF ELECTRICAL SYSTEMS AND RELATED WORK FURNISHED AND INSTALLED BY ELECTRICAL CONTRACTOR.
1. CHECK ALL MOTORS AND ROTATING EQUIPMENT FOR PROPER ROTATION.
2. TEST ALL FEEDERS WITH MEGGER PRIOR TO ENERGIZING TO ASSURE CODE RESISTANCE IS MET.
3. CHECK ALL FUSES AND OVERLOADS FOR PROPER SIZING.
4. CHECKING OF ALL ELECTRICAL POWER AND CONTROL WIRING, INTERLOCKS, ETC., RELATED TO MECHANICAL INSTALLATIONS TO DETERMINE THAT ALL WIRING IS CORRECT.
5. ALL EQUIPMENT FURNISHED BY THIS CONTRACTOR WHICH TEST PROVE TO BE DEFECTIVE OR OPERATING IMPROPERLY SHALL BE REMEDIED BY THIS CONTRACTOR AT NO ADDITIONAL COST TO THE OWNER.

RACEWAYS

I. RACEWAYS

A. EXTENT OF RACEWAY WORK IS INDICATED DIAGRAMMATICALLY ON THE DRAWINGS AND IN THE SCHEDULES.
1. WHEN SIZE IS NOT INDICATED ON PLANS, CONDUIT SHALL BE SIZED FOR CONDUCTORS IN ACCORDANCE WITH TABLES 3(A)(B)(C), CHAPTER 9 OF THE N.E.C..
2. THE ROUTING AND METHOD OF INSTALLATION OF ALL CONDUITS SHALL BE CO-ORDINATED SO AS NOT TO INTERFERE WITH OTHER EQUIPMENT INSTALLATIONS AND SHALL MEET WITH THE COMPLETE SATISFACTION OF THE OWNER'S REPRESENTATIVE.
3. THE USE IF INTERMEDIATE METAL CONDUIT (IMC), ELECTRICAL NON-METALLIC TUBING (ENT), ARMORED CABLE (AC), METAL CLAD CABLE (MC), OR MANUFACTURED CABLE ASSEMBLIES SHALL NOT BE INCORPORATED INTO THE WORK.
4. USE ONLY THE TYPES OF RACEWAYS SPECIFIED HERE IN.

B. TYPES OF RACEWAYS SPECIFIED IN THIS SECTION INCLUDE THE FOLLOWING:
1. ELECTRICAL METALIC TUBING (EMT); MINIMUM TRADE SIZE 1/2".
2. FLEXIBLE METAL CONDUIT. MINIMUM TRADE SIZE 1/2".
3. LIQUID- TIGHT FLEXIBLE METAL CONDUIT (SEALTIGHT) MINIMUN TRADE SIZE 1/2".
4. RIGID METAL CONDUIT. MINIMUM TRADE SIZE 1/2". 5. RIGID NONMETALLIC CONDUIT (PVC). SCHEDULE 40, MINIMUM TRADE SIZE 1/2".

C. FITTINGS
1. FITTINGS FOR EMT SHALL BE STEEL SET SCREW OR COMPRESSION TYPE WITH FACTORY INSTALLED INSULATED THROAT CONNECTORS. DIE CAST OR POT METAL FITTINGS ARE NOT ACCEPTABLE.
2. FITTINGS FOR FLEXIBLE CONDUIT SHALL BE STEEL OR CAST IRON.
3. FITTINGS FOR RIGID CONDUIT SHALL BE STEEL THREADED TYPE.
4. FITTINGS FOR PVC SHALL BE SCHEDULE 40 GLUE-ON TYPE.

II. INSTALLATION OF RACEWAYS

A. ALL CONDUITS SHALL BE INSTALLED CONCEALED, EXCEPT IN EQUIPMENT ROOM, CHASES OR AS INDICATED ON THE DRAWINGS. ALL CONDUITS, EXPOSED AND CONCEALED SHALL BE RUN PARALLEL AND PERPENDICULAR TO BUILDING LINES AND SHALL BE GROUPED TOGETHER AS MUCH AS POSSIBLE, EVEN ABOVE LAY-IN CEILINGS.

B. A SEPARATE GROUNDING CONDUCTOR SHALL BE INSTALLED IN ALL RUNS. WHERE SIZES LARGER THAN #12 AWG ARE REQUIRED BY THE NEC, THE CONDUCTOR SHALL BE SIZED AS INDICATED IN THE NEC. ALL GROUNDING CONDUCTORS SHALL HAVE A GREEN OUTER COVERING, OR GREEN MARKING TAPE OVER THEIR ENTIRE EXPOSED LENGTHS.

C. MECHANICALLY FASTEN TOGETHER METAL CONDUITS, ENCLOSURES, AND RACEWAYS FOR CONDUCTORS TO FORM A CONTINUOUS ELECTRICAL CONDUCTOR. CONNECT TO ELECTRICAL BOXES, FITTINGS AND CABINETS TO PROVIDE ELECTRICAL CONTINUITY AND FIRM MECHANICAL ASSEMBLY.

D. AVOID USE OF DISSIMILAR METALS THROUGH SYSTEM TO ELIMINATE POSSIBILITY OF ELECTROLYSIS.

E. INSTALL EXPANSION FITTINGS IN RACEWAYS EVERY 200' LINEAR RUN OR WHEREVER STRUCTURAL EXPANSION JOINTS ARE CROSSED.

F. PROVIDE NYLON PULL CORD IN ALL EMPTY CONDUITS.

G. CONDUIT INSTALLATION
1. USE RIGID METAL CONDUIT FOR ALL WEATHER EXPOSED WORK, FOR ALL STUB-UPS IN KITCHEN AREA, FOR ALL ROOF PENETRATIONS THROUGH PATE PLUGS AND FOR FREEZER/ COOLER PENETRATIONS.
2. USE E.M.T. FOR ALL INTERIOR CONCEALED AND FOR EXPOSED WORK NOT SUBJECT TO MECHANICAL INJURY.
3. USE P.V.C. FOR ALL UNDERGROUND WORK OR WORK INSTALLED IN CONCRETE. USE RIGID METAL CONDUIT ELBOW AT STUP-UP LOCATIONS.
4. USE FLEXIBLE METAL CONDUIT FROM OUTLET BOXES TO RECESSED LIGHTING FIXTURE AND FINAL 24" OF CONNECTION TO ITEMS SUBJECT TO MOVEMENT OR VIBRATION.
5. USE LIQUID-TIGHT FLEXIBLE CONDUIT FOR FINAL 24" CONNECTION TO ITEMS WHERE SUBJECTED TO ONE OR MORE OF THE FOLLOWING CONDITIONS:
   a. EXTERIOR LOCATION.
   b. MOIST OR HUMID ATMOSPHERE WHERE CONDENSATE CAN BE EXPECTED TO ACCUMULATE.
   c. CORROSIVE ATMOSPHERE.
   d. SUBJECTED TO WATER SPRAY OR DRIPPING OIL, WATER OR GREASE.
   e. FINAL CONNECTION TO ROTATING OR VIBRATING EQUIPMENT.
6. CUT CONDUITS STRAIGHT, PROPERLY REAM AND CUT THREADS FOR HEAVY WALL CONDUIT DEEP AND CLEAN.
7. FIELD BEND CONDUIT WITH BENDERS DESIGNED FOR THE PURPOSE SO AS NOT TO DISTORT NOR VARY INTERNAL DIAMETER.

CONDUCTORS

I. CONDUCTORS

A. ALL WIRE SHALL BE COPPER WITH THWN INSULATION.

B. THE USE OF ARMORED , BX, NM, OR ANY MANUFACTURED CABLE ASSEMBLY (EXCEPT MC) SHALL NOT BE INCOPORATED INTO THE WORK.

C. MC CABLE SHALL BE ACCEPTACBLE FOR USE ON ALL 20 AMP 120V BREAKER CIRCUITS, ALL CIRCUITS 30 AMPS AND ABOVE AND AL 208 VOLTS SHALL BE IN RACEWAY.

D. ALL WIRING SHALL BE IN CONDUIT.

E. COLOR CODING OF CONDUCTORS SHALL BE AS FOLLOWS:
1. 120/208V SYSTEMS: PHASE A- BLACK, PHASE B- RED, PHASE C- BLUE, NEUT. - WHITE, GND. - GREEN.
2. 277/480V SYSTEM: PHASE A - YELLOW, PHASE B - BROWN, PHASE C - ORANGE, NEUT. - NATURAL GRAY, GND. - GREEN.

F. AWG #10 AND SMALLER SHALL BE SOLID. AWG #8 AND LARGER SHALL BE STRANDED.

II. WIRE CONNECTIONS

A. ALL FEEDER AND SUB-FEEDER WIRING CONNECTIONS SHALL BE MADE WITH COMPRESSION CONNECTORS BY SQUARE D OR ACCEPTABLE EQUIVALENT.

B. ALL BRANCH WIRING CONNECTIONS SHALL BE 3M SCOTCH LOCK CONNECTORS OR ACCEPTABLE EQUIVALENT.

C. WHERE CABLE CONNECTIONS REQUIRE INSULATION, SCOTCH #33, ELECTRICAL TAPE SHALL BE USED FOR WRAPPING.

BOXES AND FITTINGS

I. BOXES AND FITTINGS

A. EXTENT OF ELECTRICAL BOX AND ASSOCIATED FITTING WORK IS INDICATED BY DRAWINGS AND SCHEDULES.

II. OUTLET BOXES

A. CEILING: 4" SQUARE, 2-1/8" DEEP FOR EXPOSED OR FURRED WORK: 3" DEEP FOR BOXES POURED IN CONCRETE. PROVIDE CONCRETE POUR BOXES OF THE TYPE SPECIALLY DESIGNED FOR THE APPLICATION. PROVIDE PLASTER RINGS WHERE REQUIRED.

B. WALL: 4" SQUARE, 2-1/8" DEEP BOXES: PROVIDE EXTENSION RINGS OR COVERS OF SUFFICIENT DEPTH TO BRING COVERS FLUSH WITH THE FINISHED SURFACE.

C. MASONRY: FOR FLUSH MOUNTED BOXES IN EXPOSED MASONRY OR TILE, PROVIDE COVERS WITH SQUARE CORNERS ON THE RAISED PORTION AND WITH SUFFICIENT DEPTH TO TRIM OUT FLUSH WITH FINISHED SURFACE.

D. EXPOSED AND KITCHEN EQUIPMENT: PROVIDE FS OR FD BOXES WITH SUITABLE WEATHERPROOF COVERS.

III. PULL AND JUNCTION BOXES

A. PROVIDE BOXES WHERE REQUIRED TO FACILITATE THE PULLING OF WIRES OR CABLES. BOXES SHALL BE IN ACCORDANCE WITH ARTICLE 370 OF N.E.C..

IV. ACCESSORIES

A. PROVIDE CORROSION-RESISTANT KNOCKOUT CLOSURES, CONDUIT LOCKNUTS AND MALLEABLE IRON CONDUIT BUSHINGS, OFFSET CONNECTORS, OF TYPES AND SIZES, TO SUIT RESPECTIVE INSTALLATION REQUIREMENTS AND APPLICATIONS.

V. INSTALLATION OF BOXES AND FITTINGS

A. POSITION RECESSED OUTLET BOXES ACCURATELY TO ALLOW FOR SURFACE FINISH THICKNESS.

B. FASTEN ELECTRICAL BOXES FIRMLY AND RIGIDLY TO SUBSTRATES OR STRUCTURAL SURFACES TO WHICH ATTACHED OR SOLIDLY EMBED ELECTRICAL BOXES IN CONCRETE OR MASONRY.

VI. LOCATIONS OF OUTLETS

A. IN GENERAL THE VARIOUS OUTLETS ARE TO BE LOCATED AT THE FOLLOWING HEIGHTS ABOVE FINISHED FLOOR TO THE CENTER LINE OF BOX, UNLESS NOTED OTHERWISE AT AN INDIVIDUAL OUTLET ON THE DRAWINGS:
1. WALL SWITCHES (VERT. MTD.) 46"
2. RECEPTACLES (VERT. MTD.) 18"
3. PHONE OUTLETS (VERT. MTD.) 18"
4. OUTLETS ABOVE COUNTERS (HORZ. MTD.) 6" ABOVE BACKSPLASH.

B. OUTLET MOUNTING HEIGHTS INDICATED ON THE DRAWINGS AT OUTLETS TAKE PRECEDENCE. REFER TO DRAWINGS FOR DETAILS OF OTHER EQUIPMENT MOUNTING HEIGHTS. MOUNTING HEIGHTS FOR FLUSH OUTLETS IN BLOCK WALLS MAY BE CHANGED FOR INSTALLATION. CONSULT OWNER'S REPRESENTATIVE IN FIELD PRIOR TO ANY SUCH INSTALLATION.

CONNECTIONS FOR EQUIPMENT

I. CONNECTIONS FOR EQUIPMENT

A. GENERAL: FOR EACH ELECTRICAL CONNECTION INDICATED PROVIDE COMPLETE ASSEMBLY OF MATERIALS, INCLUDING BUT NOT NECESSARILY LIMITED TO, PRESSURE CONNECTORS, TERMINALS (LUGS), ELECTRICAL INSULATING TAPE, HEAT-SHRINKABLE INSULATING TUBING, CABLE TIES, SOLDERLESS WIRE-NUTS, AND OTHER ITEMS AND ACCESSORIES AS NEEDED TO COMPLETE SPLICES AND TERMINATIONS OF TYPES INDICATED.

WIRING DEVICES

I. WIRING DEVICES

A. THE EXTENT OF WIRING DEVICE WORK IS INDICATED BY THE DRAWINGS AND SCHEDULES.

B. PROVIDE WIRING DEVICES WHICH ARE U.L. LISTED AND LABELED. II. ACCEPTABLE MANUFACTURERS

A. HARVEY HUBBELL CO.

B. GENERAL ELECTRIC CO.

C. LEVITON MFG. CO.

III. FABRICATED WIRING DEVICES

A. SWITCHES SHALL BE 20 AMP. 120/277 VOLT RATED, HUBBELL #1221 - IVORY OR BROWN.

B. RECEPTACLES SHALL BE 20 AMP 125 VOLT RATED, HUBBELL #5362 - IVORY OR BROWN. FOR OTHER APPLICATIONS REFER TO THE DRAWINGS.

C. PROVIDE SMOOTH FINISH PLATES FOR ALL DEVICES WITH APPROPRIATE MOUNTING ARRANGEMENTS FOR GAUGED DEVICES. FOR TELEPHONE AND COMPUTER/AMX AND MICROPHONE OUTLETS PROVIDE BUSHED HOLE COVER PLATES. PLATES SHALL BE IVORY, BROWN OR GRAY STAINLESS STEEL.
1. GRAY STAINLESS STEEL PLATES FOR SERVICE AREAS, KITCHEN STORAGE AND RESTROOMS.
2. IVORY PLATES FOR ALL OTHER AREAS EXCEPT BROWN PLATES ON WOOD OR DARK SURFACES.
3. IVORY DEVICES WHERE 302 STAINLESS STEEL OR IVORY PLATES ARE USED.
4. BROWN DEVICES WHERE BROWN PLATES ARE USED.

MOTOR DISCONNECTS

I. DISCONNECT SWITCHES

A. ACCEPTABLE MANUFACTURERS
1. SQUARE D COMPANY
2. SIEMENS

B. HEAVY-DUTY SAFETY SWITCHES: PROVIDE SURFACE MOUNTED, HEAVY DUTY TYPE, SHEET STEEL ENCLOSED SWITCHES, OF TYPES, SIZES AND WITH ELECTRICAL CHARACTERISTICS INDICATED: INCOPORATING QUICK-MAKE QUICK-BREAK TYPE SWITCHES: SWITCH BLADE SHALL BE VISIBLE IN OFF POSITION WITH THE DOOR OPEN. EQUIP. WITH OPERATING HANDLE WHICH IS INTERGRAL PART OF ENCLOSURE BASE AND WHOSE OPERATING POSITION IS CLEARLY INDICATED AND IS PADLOCKABLE IN THE OFF POSITION. CONSTRUCT CURRENT CARRYING PARTS OF HIGH-CONDUCTIVITY COPPER AND SILVER-TUNGSTEN TYPE SWITCH CONTACTS. PROVIDE NEMA TYPE 3R ONLY.

PANELBOARDS

I. DESCRIPTION OF WORK

A. TYPES OF PANELBOARDS FOR THIS PROJECT ARE AS FOLLOWS:
1. 120/208V-3 PHASE 4W-SN; SQ. D "NQOD" AS SCHEDULED.

II. ACCEPTABLE MANUFACTURERS

1. SQUARE D CO. (BOLT ON BREAKERS)
2. SIEMENS (BOLT ON BREAKERS)
3. GENERAL ELECTRIC (BOLT ON BREAKERS)
4. WESTINGHOUSE (BOLT ON BREAKERS)

III. PANELBOARDS

A. PROVIDE DEAD-FRONT SAFETY CONSTRUCTED FACTORY-ASSEMBLED CIRCUIT BREAKER TYPE PANELBOARDS IN SIZES AND RATINGS AS INDICATED. EQUIP. WITH PANELBOARD UNIT DEVICE, OF TYPES, RATINGS AND CHARACTERISTICS INDICATED. BUSS STRUCTURE AND MAIN LUGS OR MAIN BREAKER SHALL HAVE CURRENT RATINGS AS SHOWN ON THE PANELBOARD SCHEDULE, SUCH RATINGS SHALL BE ESTABLISHED BY TEST CONDUCTED IN ACCORDANCE WITH UNDERWRITERS LABORATORIES STANDARD UL 67. THE USE OF CONDUCTOR DIMENSIONS WILL NOT BE ACCEPTED IN LIEU OF ACTUAL HEAT TEST. BUS BAR CONNECTIONS TO THE BRANCH CIRCUIT BREAKERS SHALL BE "PHASE-SEQUENCE" TYPE. THREE-PHASE, FOUR WIRE BUSSING SHALL BE SUCH THAT ANY THREE ADJACENT SINGLE-POLE BREAKERS ARE INDIVIDUALLY CONNECTED TO EACH OF THE THREE DIFFERENT PHASES IN SUCH A MANNER THAT TWO OR THREE-POLE BREAKERS CAN BE INSTALLED AT ANY LOCATION. ALL CURRENT CARRYING PARTS OF THE BUSS ASSEMBLY SHALL BE PLATED COPPER WITH CONDUCTIVITY OF NOT LESS THAN 98%.

B. PANELBOARD ENCLOSURE: PROVIDE GALVANIZED SHEET STEEL CABINET TYPE ENCLOSURES, IN SIZES AND NEMA TYPES AS INDICATED, CODE GAUGE MINIMUM 16-GAUGE THICKNESS. CONSTRUCT WITH MULTIPLE KNOCKOUTS AND WIRING GUTTERS. PROVIDE FRONTS WITH ADJUSTABLE TRIM CLAMPS, AND DOORS WITH FLUSH LOCKS AND KEYS, ALL PANELBOARD ENCLOSURES KEYED ALIKE, WITH CONCEALED PIANO DOOR HINGES. EQUIP WITH INTERIOR CIRCUIT DIRECTORY FRAME, AND CARD WITH CLEAR PLASTIC COVERING. PROVIDE BAKED GRAY ENAMEL FINISH OVER A RUST INHIBITOR COATING. PROVIDE ENCLOSURES FABRICATED BY SAME MANUFACTURER AS PANELBOARDS. MINIMUM DEPTH OF 5-3/4" & MINIMUM WIDTH OF 20" FOR "NQOD" PANELS.

LIGHTING FIXTURES

I. LIGHTING FIXTURES

A. HANDLE LIGHTING FIXTURES CAREFULLY TO PREVENT DAMAGE, BREAKING AND SCORING. DO NOT INSTALL DAMAGED FIXTURES OR COMPONENTS, REPLACE WITH NEW.

B. STORE LIGHTING FIXTURES IN A CLEAN DRY PLACE. PROTECT FROM WEATHER, DIRT, FUMES, WATER CONSTRUCTION DEBRIS AND PHYSICAL DAMAGE.

C. SHIP FIXTURES FACTORY ASSEMBLED, WITH PARTS REQUIRED FOR A COMPLETE INSTALLATION.

D. FLUORESCENT BALLAST SHALL BE CLASS P, LOW-ENERGY RAPID START SOUND RATED A.

E. PROVIDE HID LAMP BALLAST CAPABLE OF OPERATING LAMP TYPES WITH RATINGS INDICATED, REACTOR TYPE, HIGH POWER FACTOR CORE AND COIL ASSEMBLY ENCAPSULATED IN NON MELT RESIN, INSTALL CAPACITOR OUTSIDE BALLAST ENCAPSULATION FOR EASY FIELD REPLACEMENT.

F. PROVIDE FLUORESCENT LAMPS OF TYPES INDICATED.

G. PROVIDE HID LAMPS IN WATTAGES AND TYPES INDICATED.

H. PROVIDE INCANDESCENT LAMPS IN THE SIZES AND RATED AS INDICATED AND 130 VOLT RATED.

I. PROVIDE FIXTURES AND/OR FIXTURE OUTLET BOXES WITH HANGERS TO PROPERLY SUPPORT FIXTURE WEIGHT.

J. INSTALL FLUSH MOUNTED FIXTURES TO ELIMINATE LIGHT LEAKAGE BETWEEN FRAME AND FINISHED SURFACE.

K. AT DATE OF SUBSTANTIAL COMPLETION REPLACE LAMPS IN ALL FIXTURES WHICH ARE OBSERVED TO BE INOPERATIVE OR NOTICEABLY DIMMED AFTER CONTRACTORS USE AS JUDGED BY THE OWNER'S REPRESENTATIVE

Sheet List Table

Sheet Number	Sheet Title
	Electrical
E0.0	ELECTRICAL SPECIFICATIONS
E1.0	ELECTRICAL SITE PLAN
E2.0	ELECTRICAL PLAN - LIGHTING
E3.0	ELECTRICAL PLAN - POWER
E4.0	ELECTRICAL DETAILS
E5.0	ELECTRICAL PANEL SCHEDULES AND RISER

GENERAL NOTES

1. ALL WORK SHOWN SHALL COMPLY WITH ALL NATIONAL, STATE AND LOCAL CODES, ORDINANCES, ETC.
2. SEE LUMINAIRE SCHEDULE E2.0 FOR INFORMATION.
3. EXIT SIGNS AND EMERGENCY LIGHTS SHALL HAVE THEIR OWN SELF-CONTAINED STANDBY BATTERY POWER SUPPLY. IF LOCAL CODE REQUIRES A DIRECT TAP BEFORE ANY CIRCUIT BREAKERS THEN INCORPORATE INTO THE FEEDER DIAGRAM.
4. PROVIDE EMERGENCY LIGHTING TO MEET THE REQUIRED FOOT CANDLE LEVEL PER LOCAL CODE.
5. LUMINAIRES INSTALLED IN CONTINUOUS ROWS SHALL BE GROUNDED WITH A CONDUCTOR ROUTED FROM LUMINAIRE TO LUMINAIRE, MOUNTED TO EACH WITH GROUNDING LUG OR SCREW. ALIGNING CLIPS ARE NOT ACCEPTABLE. LUMINAIRE GROUNDING SHALL BE INSTALLED IN COMPLIANCE WITH NATIONAL ELECTRICAL CODE, ARTICLE 410-21.
6. CEILING LIGHTS ARE TO BE WIRED TO THE BAR JOIST MEMBERS AT THE DIAGONAL CORNERS.
7. COORDINATE LIGHTING WITH SPRINKLER & MECHANICAL DRAWINGS AS APPLICABLE.
8. REFERENCE TO HEIGHT OF OUTLET OR RECEPTACLE SHALL BE MEASURED FROM FINISHED FLOOR TO CENTER OF OUTLET OR RECEPTACLE.
9. ALL RECEPTACLES SHALL BE GROUNDING TYPE.
10. ALL RECEPTACLES AND SWITCHES SHALL HAVE TWO (2) REVOLUTIONS OF ELECTRICAL TAPE (SCOTCH 33+) OVER ALL THE TERMINALS, TO PREVENT ACCIDENTAL CONTACT WITH THE JUNCTION BOX OR OUTLET BOX.
11. CONDUIT SIZE TO BE PER NEC. PVC CONDUIT AND FITTINGS ARE ACCEPTABLE ONLY BELOW SUBBASE MATERIAL OF GROUND BEARING FLOOR SLABS WHERE SUCH USE IS ACCEPTABLE TO THE AUTHORITY HAVING JURISDICTION.
12. CONDUIT SHALL BE ELECTRICAL METALLIC TUBING (EMT), RIGID STEEL (SIZE PER NEC), OR MC CABLE WHERE ALLOWED BY CODE. WHERE MC CABLE IS USED, PROPER SECUREMENT AND SUPPORT (AT INTERVALS NOT EXCEEDING 6 FEET) SHALL BE FOLLOWED PER NEC ART. 330.
13. ELECTRICAL CONTRACTOR TO PROVIDE JUNCTION BOX AND CONDUIT STUB-UP ABOVE CEILING FOR ALL LOW VOLTAGE CABLING.
14. DIMENSION IS FROM FINISHED WALL, SEE ARCHITECTURAL FOR WALL THICKNESS.
15. FIELD COORDINATE EXACT LOCATION OF OUTLETS AS DETERMINED BY THE ACTUAL FURNITURE LAY OUT. VERIFY WITH FIXTURE PLAN.
16. COORDINATE WITH OTHER DISCIPLINES FOR ELECTRICAL REQUIREMENTS OF EQUIPMENT NOT SHOWN ON DETAILS (i.e. ROOF-TOP UNITS, UNIT HEATERS, FANS, ETC.).
17. CONTRACTOR IS REQUIRED TO INSTALL STANDARD RECEPTACLES FOR CIRCUITS DEDICATED TO SPECIFIC EQUIPMENT. SUBJECT TO THE APPROVAL OF CODE ENFORCING AGENCY.
18. ALL 125V, SINGLE PHASE 15 AMP AND 20 AMP RATED RECEPTACLES INSTALLED IN THE LOCATIONS SPECIFIED IN NEC.ART 210.8 (B)(1) - (8) SHALL HAVE GROUND FAULT CIRCUIT INTERRUPTER PROTECTION.
19. SERVICE CONDUCTORS ARE DESIGNED BASED ON THE SERVICE DISTANCE OF 100' TO MEET THE 2% VOLTAGE DROP PER NEC.
    IF SERVICE CONDUCTOR IS BETWEEN:
    100' TO 150' - E.C. SHALL INCREASE THE CONDUCTOR BY ONE SIZE(S) LARGER THAN DESIGN
    150' TO 200' - E.C. SHALL INCREASE THE CONDUCTOR BY TWO SIZE(S) LARGER THAN DESIGN
    200' TO 250' - E.C. SHALL INCREASE THE CONDUCTOR BY THREE SIZE(S) LARGER THAN DESIGN
20. BRANCH CONDUCTORS ARE DESIGNED BASED ON A DISTANCE OF 100' TO MEET THE 3% VOLTAGE DROP PER NEC.
    IF BRANCH CONDUCTOR IS BETWEEN:
    100' TO 150' - E.C. SHALL INCREASE THE CONDUCTOR BY ONE SIZE(S) LARGER THAN DESIGN
    150' TO 200' - E.C. SHALL INCREASE THE CONDUCTOR BY TWO SIZE(S) LARGER THAN DESIGN
    200' TO 250' - E.C. SHALL INCREASE THE CONDUCTOR BY THREE SIZE(S) LARGER THAN DESIGN
21. E.C. IS TO VERIFY WITH LOCAL AHJ FOR REQUIREMENT OF EXTERIOR EMERGENCY EGRESS LIGHTING AND ADJUST BID TO INCORPORATE AS NEEDED.
22. A.I.C OF PANELS AND SERVICE ENTRANCE EQUIPMENT IS BASED ON TYPICAL TRANSFORMER SPECIFICATIONS. CONTRACTOR SHALL FIELD VERIFY EXACT UTILITY A.I.C RATING AND MAKE EQUIPMENT ADJUSTMENTS AS REQUIRED IN THE FIELD AT NO EXTRA COST TO OWNER. CONTRACTOR SHALL NOTIFY ENGINEER OF ANY FIELD CHANGES BASED ON UTILITY EQUIPMENT DATA.

FIELD VERIFY ALL CONDITIONS

NOTE! AS NOTED IN THE SPECIFICATIONS, ALL WIRING LAYOUTS, PIPING LAYOUTS AND DUCT LAYOUTS ARE SCHEMATIC. EXACT LOCATIONS SHALL BE DETERMINED BY THE CONSTRUCTION AND STRUCTURE OF THE BUILDING AND SHALL BE VERIFIED AND COORDINATED IN THE FIELD. EACH TRADE CONTRACTOR SHALL VERIFY WITH THE GENERAL CONTRACTOR THAT HE HAS THOROUGHLY REVIEWED AND COORDINATED ALL LOCATIONS AND ROUTINGS WITH ALL OTHER TRADES PRIOR TO FABRICATION OF CONDUITS, DUCTS, OR PIPING, AND START OF INSTALLATION OF SAME (INCLUDING SPRINKLER PIPING WHEN PRESENT ON JOB). ANY INSTALLATION OR CONSTRUCTION CONFLICTS WHICH OCCUR IN THE FIELD SHALL BE RESOLVED BY THE TRADE CONTRACTOR TO THE SATISFACTION OF THE OWNER AND ARCHITECT AND AT NO EXPENSE TO THE OWNER, ARCHITECT AND/OR GENERAL CONTRACTOR.

THE CONTRACTOR SHALL CONTACT THE ARCHITECT, ENGINEER OR OWNER PRIOR TO BIDDING FOR INTERPRETATIONS AND CLARIFICATIONS OF THE DESIGN AND INCLUDE IN HIS BID ALL COSTS TO MEET THE DESIGN INTENT. CLARIFICATIONS MADE BY THE ARCHITECT, ENGINEER OR OWNER A

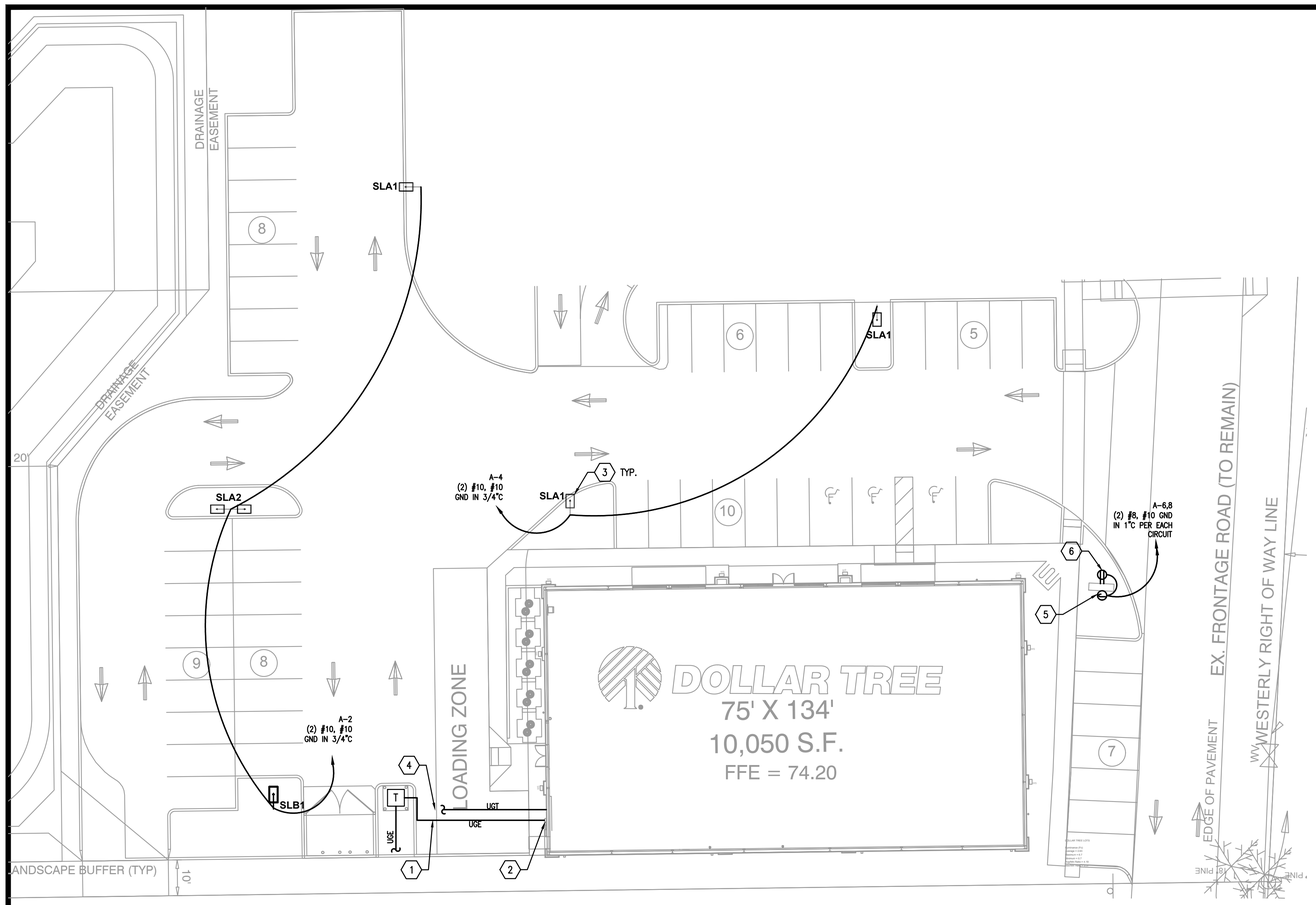

ELECTRICAL SITE PLAN

1"=20'

NORTH

GENERAL NOTES

1. VERIFY WITH LOCAL AUTHORITIES AND UTILITIES THAT OWNER'S SIGNS, POLES, AND THEIR APPURTENANCES ARE NOT LOCATED ON OR OVER ANY EASEMENT OR MUNICIPAL RIGHT OF WAY.
2. SITE WORK, UTILITY, AND ROADWAY INFORMATION ARE TAKEN FROM BOUNDARY AND TOPO SURVEY SITE PLANS. REFER TO C-DRAWINGS.
3. MINIMUM CONDUIT SIZE SHALL BE 3/4"C. MINIMUM CONDUCTOR SIZE SHALL BE #10AWG COPPER UNLESS OTHERWISE NOTED.
4. REFER TO BUILDING ELECTRICAL DRAWINGS FOR EXTERIOR LIGHTING CONTROL.
5. FOR WORK UNDER THIS DIVISION, ELECTRICAL CONTRACTOR SHALL PROVIDE AND INSTALL ONLY NEW AND U.L. LABELED ELECTRICAL EQUIPMENT, UNLESS INDICATED OTHERWISE BY THE CONTRACT DOCUMENTS.
6. FOR WORK UNDER THIS DIVISION, ELECTRICAL CONTRACTOR SHALL CONTACT ALL UTILITIES FOR VERIFICATION AND IDENTIFICATION OF ALL UNDERGROUND RUNS, PRIOR TO SITE TRENCHING ("CALL BEFORE YOU DIG").
7. FOR WORK UNDER THIS DIVISION, ELECTRICAL CONTRACTOR SHALL PERFORM ALL WORK IN STRICT ACCORDANCE WITH THE CURRENT EDITION OF THE NATIONAL ELECTRIC CODE (NFPA 70), AND THE LIFE SAFETY CODE (NFPA 101), AS ADOPTED AND/ OR AMENDED BY STATE AND LOCAL AUTHORITIES HAVING JURISDICTION.
8. FOR WORK UNDER THIS DIVISION, ELECTRICAL CONTRACTOR SHALL COORDINATE AND FIELD VERIFY LOCATIONS OF ALL UTILITY SERVICE RUNS, ORIGINATIONS, TERMINATIONS AND ANY INSTALLATION REQUIREMENTS (i.e. ELECTRICAL, TELEPHONE, WATER, GAS, SEWAGE, ETC.), AS RELATED TO THIS JOB, OR THEREBY EFFECTED.
9. E.C. TO VERIFY VOLTAGE DROP IN SITE LIGHTING CIRCUITS.

KEYED NOTES

1. PROVIDE SECONDARY CONDUITS FROM UTILITY TRANSFORMER TO CT/METER MOUNTED ON BUILDING EXTERIOR. VERIFY EXACT REQUIREMENTS WITH LOCAL UTILITY COMPANY PRIOR TO INSTALLATION.
2. PROVIDE METER ON BUILDING EXTERIOR PER LOCAL UTILITY COMPANY REQUIREMENTS.
3. SEE POLE BASE DETAIL ON CIVIL SITE PLAN SHEET SL1 FOR ADDITIONAL INFORMATION. SEE SL1 FOR LIGHTING SPECIFICATIONS. ALL SITE LIGHTING CONDUIT IS TO BE UNDERGROUND.
4. PROVIDE ONE 4" UNDERGROUND PVC CONDUIT WITH PULL STRING PER TELEPHONE UTILITY COMPANY'S SPECIFICATIONS AND REQUIREMENTS FOR TELEPHONE SERVICE. COORDINATE EXACT ROUTING AND STUB-UP LOCATION WITH THE TELEPHONE UTILITY COMPANY AND CLEARLY MARK STUB-UP LOCATION. STUB-UP LOCATIONS INDICATED ARE BASED ON INFORMATION THAT WAS AVAILABLE DURING DESIGN. SUBMIT A LINEAL FOOT UNIT PRICE WITH THE BID FOR ADDITIONAL CONDUIT, OF EACH SIZE AND TYPE INDICATED, IN THE EVENT THE FINAL UTILITY COMPANY DIRECTED STUB-UP LOCATION DIFFERS FROM WHAT IS INDICATE
5. VERIFY EXACT LOCATION WITH OWNER FOR MONUMENT SIGN. PROVIDE WEATHERPROOF JUNCTION BOX AND 20A TOGGLE SWITCH 18" AFG FOR MAINTENANCE DISCONNECT SWITCH FOR MAIN I.D. SIGN.
6. PROVIDE GFCI TYPE WEATHERPROOF RECEPTACLE MOUNTED ON MAIN SIGN SUPPORT +14" AFG. THIS RECEPTACLE SHALL NOT BE SWITCHED. (BYPASS THE CONTACTOR AND SIGN'S DISCONNECT SWITCH.)

Landreth Luminaire Schedule

Label	Qty	Symbol	Arrangement	[MANUFAC]	Description	LLF	Lum. Lumens	Lum. Watts	Total Watts	Cutoff Class	BUG Rating
SLA1	3		SINGLE	Lithonia Lighting	DSX0 LED P6 40K T3M MVOLT XPA DBLXD; POLE MOUNTED @ 25' AFG	1.000	15975	119	134	N.A.	B3-U0-G3
SLA2	1		BACK-BACK	Lithonia Lighting	DSX0 LED P6 40K T3M MVOLT XPA DBLXD; POLE MOUNTED @ 25' AFG	1.000	15975	119	268	N.A.	B3-U0-G3
SLB1	1		SINGLE	Lithonia Lighting	DSX1 LED P9 40K T3M MVOLT XPA HS DBLXD; POLE MOUNTED @ 25' AFG	1.000	27597	115	241	N.A.	B3-U0-G4

VOLTAGE DROP CALCULATIONS

CIRCUIT FROM	CIRCUIT TO	VOLTS (L-N) (1Ø)	VOLTS (L-L) (1Ø or 3Ø)	PHASE (1=1Ø, 3=3Ø)	AMPS (per ckt wire)	CIRCUIT WIRES (# in parallel)	SYSTEM p.f.	WIRE SIZE (AWG or kcmil)	WIRE TYPE (CU , AL)	CONDUIT TYPE (STL,PVC,AL)	ONE-WAY LENGTH (FT.)	INCREMENTAL VOLTAGE DROP (volts)	INCREMENTAL VOLTAGE DROP (%)	TOTAL V.D. FROM SOURCE (volts)	TOTAL V.D. AT LOAD (%)
TRANSFORMER	DISC SW.		208	3	277.0	2	0.90	350	CU	PVC	66	0.82	0.4%	0.82	0.4%
PNL"A"	MONUMENT SIG	120		1	10.0	1	0.90	8	CU	PVC	250	3.62	3.0%	3.62	3.0%

FAULT CURRENT CALCULATION

TRANSFORMER SIZE (KVA)	225
TRANSFORMER Z (%)	1.6
"C" FACTOR (#350 COND.)	22,737
NUMBER OF CONDUCTORS PER PHASE	2
LINE TO LINE VOLTAGE	208
LINE TO NEUTRAL VOLTAGE	120
LENGTH OF SERVICE	66

$$I = \frac{225 \times 1000}{1.73 \times 208} = 625$$

$$I(sca) = \frac{625 \times 100}{1.60} = 39{,}034$$

$$F = \frac{39{,}034 \times 1.73 \times 66}{2 \times 22{,}737 \times 208} = 0.47$$

$$M = \frac{1}{1+0.47} = \frac{1}{1.47} = 0.68$$

$$Isc\ AT\ SERVICE\ DISCONNECT = 39{,}034 \times 0.68 = 26{,}522$$

SERVICE EQUIPMENT RATING = 42,000

ANY CHANGES TO THE SUPPLY POWER, OR INTERNAL ELECTRICAL SYSTEM, THAT COULD CAUSE THIS UTILITY FURNISHED OR CALCULATED VALUE TO INCREASE, SHALL BE EVIDENCE THAT A QUALIFIED PERSON REPEAT THE CALCULATIONS AND MAKE ADJUSTMENTS TO THE SYSTEM IF REQUIRED.
(AFTER REVISIONS, CHANGE THIS LABEL TO REFLECT REVISED DATA AND NEW DATE.)
PLACE ON A VISIBLE SURFACE OF THE SERVICE ENTRANCE DISCONNECT.
USE A LABEL THAT HAS MINIMUM 1/8" HIGH LETTERING AND SUITABLE FOR THE ENVIORNMENT AT THE LOCATION.

INTERPLAN PLLC
ARCHITECTURE
ENGINEERING
INTERIOR DESIGN
PROJECT MANAGEMENT

AA 003420
CA 8660

604 COURTLAND STREET
SUITE 100
ORLANDO, FLORIDA 32804
PH 407.645.5008
FX 407.629.9124

SEAL:

THIS DOCUMENT IS NOT FOR REGULATORY APPROVAL, PERMITTING, OR CONSTRUCTION.

NO DATE REMARKS
REVISIONS

SHELL BUILDING for DOLLAR TREE

N HWY 19 & CR 44
EUSTIS, FL

PROJECT NO: 2018.0328
DATE: 08-27-2018

E1.0
ELECTRICAL SITE PLAN

CHECKED: ---- DRAWN: MW

COPYRIGHT © 2018 INTERPLAN PLLC

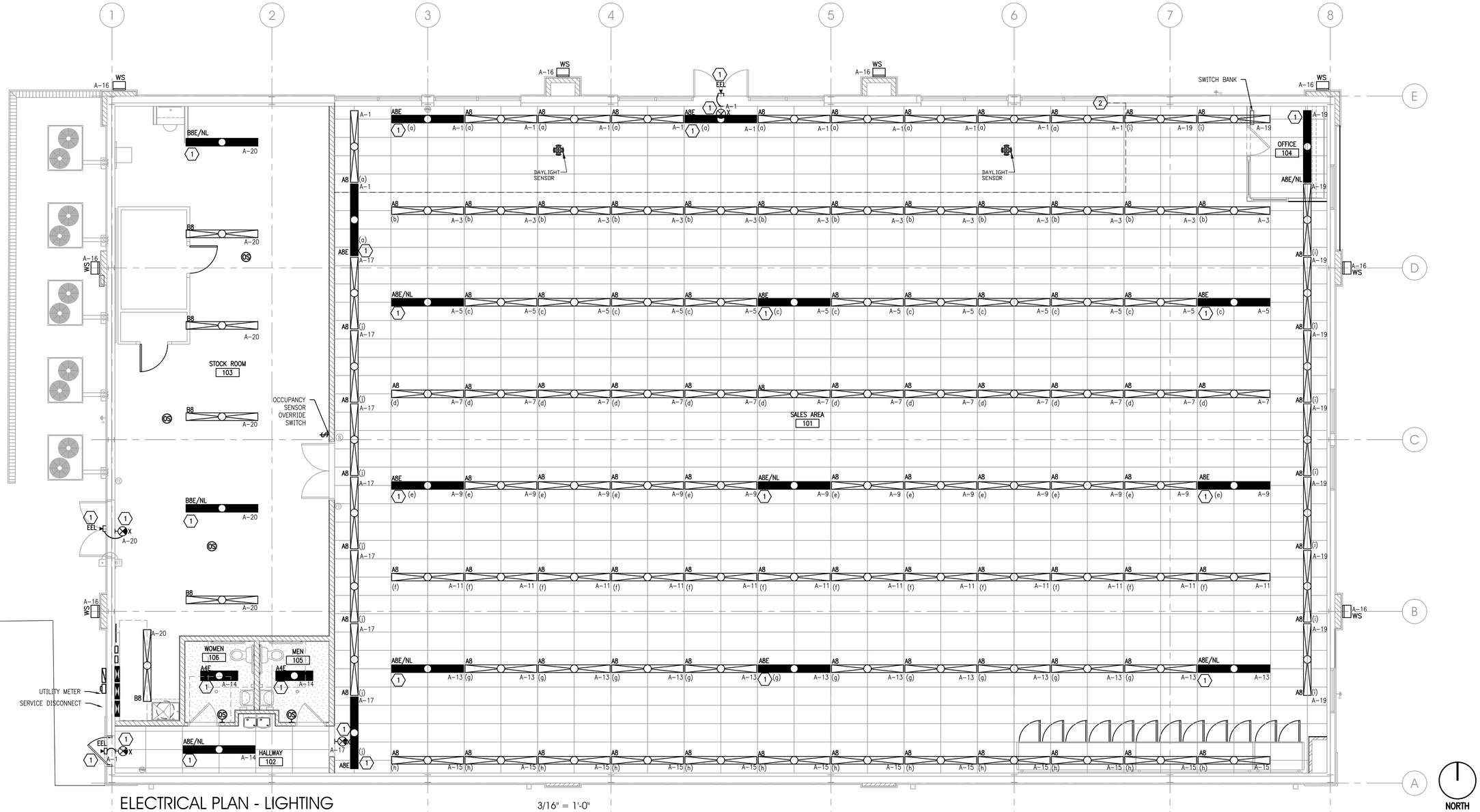

ELECTRICAL PLAN - LIGHTING

3/16" = 1'-0"

LIGHTING FIXTURE LIGHTING								
MARK	MANUFACTURER	CATALOG NUMBER	LAMP DATA				MOUNTING	DESCRIPTION
			QTY.	TYPE	VOLTS	WATTS		
A4	LITHONIA	ZL1F-L48-4500LM-MVOLT-35K-80CRI-WH	1	LED	MULTI	39	RECESSED	LED 4 FT. STRIP WITH 0-10V DIMMING STANDARD
A4E	LITHONIA	ZL1F-L48-4500LM-MVOLT-35K-80CRI-E7W-WH	1	LED	MULTI	39	RECESSED	LED 4 FT. STRIP, 0-10V DIMMING STANDARD WITH 7W EMERGENCY BATTERY BACK UP
A8	LITHONIA	ZL1F-L96-9000LM-MVOLT-35K-80CRI-WH	1	LED	MULTI	77	RECESSED	LED 8 FT. STRIP WITH 0-10V DIMMING STANDARD
A8E	LITHONIA	ZL1F-L96-9000LM-MVOLT-35K-80CRI-E7W-WH	1	LED	MULTI	77	RECESSED	LED 8 FT. STRIP, 0-10V DIMMING STANDARD WITH 7W EMERGENCY BATTERY BACK UP
B8	LITHONIA	ZL1F-L96-9000LM-MVOLT-35K-80CRI-WH-HC36	1	LED	MULTI	77	SUSPENDED	LED 8 FT. STRIP WITH 0-10V DIMMING STANDARD, 36" HANGER CHAIN
B8E	LITHONIA	ZL1F-L96-9000LM-MVOLT-35K-80CRI-E7W-WH-HC36	1	LED	MULTI	77	SUSPENDED	LED 8 FT. STRIP, 0-10V DIMMING STANDARD WITH 7W EMERGENCY BATTERY BACK UP-36" HANGER CHAIN
X	LITHONIA	LQM-S-W-SINGLE FACE-R-120/277	1	LED	MULTI	0.62	WALL	LED EXIT WHITE SIGN WITH RED LETTERS-DUAL VOLTAGE
EEL	LITHONIA	ELA NX N0806 WELN-618R0	1	BWPAR36	120	8	WALL	SURFACE MOUNTED EXTERIOR EMERGENCY LIGHT.
WS	LITHONIA	DSXW1-LED-10C-1000-40K-TFTM-DDBXD	1	LED	MULTI	116.4	WALL	LED WALL MOUNTED LUMINAIRE 40K TO BE MOUNTED IN DARK BRONZE COLOR @12' AFG.

GENERAL NOTES

1. REFER TO SHEET E0.0 FOR GENERAL NOTES AND SPECIFICATIONS.
2. REFER TO E4.0 FOR TIME CLOCK DETAILS.

KEYED NOTES

1. EXIT SIGNS, EMERGENCY BATTERY PACKS AND NIGHT LIGHTS ARE TO BE CONNECTED TO LOCAL LIGHTING CIRCUIT AHEAD OF ANY SWITCHING OR CONTROL.
2. LINE DENOTING 10' FROM THE VERTICAL GLAZING FOR PRIMARY DAYLIGHT ZONE.

INTERPLAN LLC

ARCHITECTURE
ENGINEERING
INTERIOR DESIGN
PROJECT MANAGEMENT

AA 003420
CA 8660

604 COURTLAND STREET
SUITE 100
ORLANDO, FLORIDA 32804
PH 407.645.5008
FX 407.629.9124

SEAL:

THIS DOCUMENT IS NOT FOR REGULATORY APPROVAL, PERMITTING, OR CONSTRUCTION.

NO	DATE	REMARKS

REVISIONS

SHELL BUILDING for DOLLAR TREE

N HWY 19 & CR 44
EUSTIS, FL

PROJECT NO: 2018.0328
DATE: 08-27-2018

E2.0

ELECTRICAL PLAN - LIGHTING

CHECKED: ---- DRAWN: MW

COPYRIGHT © 2018 INTERPLAN LLC RESERVED COPYRIGHTS & OWNERSHIPS THIS DRAWING, SITE, EMPLOYER OBTAINED HEREIN THE PRESENTED REPRODUCTION, ALSO HAVE SUBMITTED DRAWINGS AND WERE UNPUBLISHED.

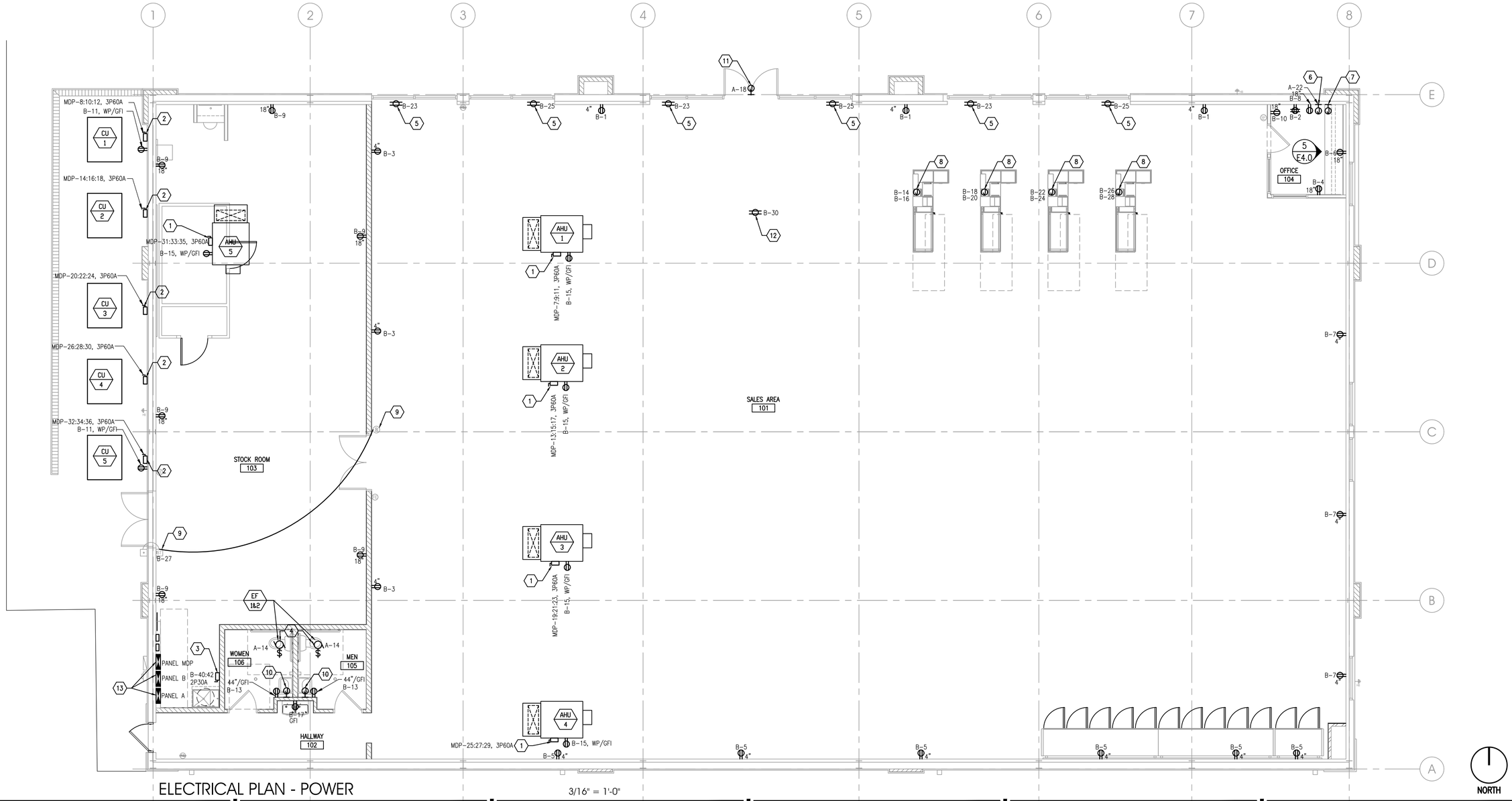

ELECTRICAL PLAN - POWER

3/16" = 1'-0"

KEYED NOTES

1. PROVIDE 3P60A NEMA 1 DISCONNECT SWITCH.
2. PROVIDE 3P60A NEMA 3R DISCONNECT SWITCH.
3. NEW WATER HEATER. PROVIDE 2P30A NEMA 1 DISCONNECT SWITCH.
4. PROVIDE 1-POLE MOTOR RATED SWITCH AND WIRE.
5. PROVIDE RECEPTACLE FOR SHOW WINDOW AS REQUIRED BY CODE. VERIFY WITH LOCAL AGENCY. VERIFY EXACT LOCATION WITH ARCHITECT.
6. 30" LONG PLUG MOLD WITH (1) 20 AMP CIRCUIT (CENTERED AND MIN OF 4 RECEPTACLES). 38" AFF.
7. SINGLE GANG BOX WITH 3/4" CONDUIT STUB UP FOR DATA CABLE. MOUNT AT 3'-5" AFF.
8. E.C. IS TO INSTALL ONE (1) JUNCTION BOX CONSISTING OF ONE (1) DEDICATED CIRCUIT AND ONE ISOLATED GROUND DEDICATED CIRCUIT FOR EACH CHECKOUT. JUNCTION BOX SHALL BE LOCATED ABOVE THE CEILING ABOVE EACH CHECKOUT, REFER TO TENANT'S FINAL PLANS FOR QUANTITY AND LOCATION.
9. E.C. IS TO PROVIDE ALL REQUIRED JUNCTION BOXES FOR THE INSTALLATION OF DOORBELL BUTTON ON EXTERIOR LATCH SIDE OF THE FREIGHT DOOR AND A DOORBELL CHIME ON THE SALES SIDE OF STOCKROOM WALL ABOVE THE STOCKROOM DOORS. COORDINATE EXACT LOCATIONS WITH G.C.
10. PROVIDE JUNCTION BOX AND 1"C 6" INTO CEILING WITH PULL STRING FOR FUTURE HAND DRYER PROVIDED AND INSTALLED BY TENANT.
11. J-BOX FOR EXTERIOR SIGN(S), VERIFY EXACT LOCATION AND HEIGHT WITH SIGN COMPANY. SIGN CONTROLLED BY 7 DAY PROGRAMMABLE TIME CLOCK. PROVIDE 3/4" CONDUIT TO EXTERIOR FOR SIGN WIRING.
12. CEILING MOUNTED DUPLEX CENTER ON STOREFRONT DOORS, 12' FROM WALL.
13. PROVIDE ELECTRICAL PANEL SCHEDULES FOR CIRCUIT DESCRIPTION.

ALL SINGLE-PHASE RECEPTACLES RATED 150 VOLTS TO GROUND OR LESS, 50 AMPERES OR LESS AND THREE PHASE RECEPTACLES RATED 150 VOLTS TO GROUND OR LESS, 100 AMPERES OR LESS INSTALLED IN THE FOLLOWING LOCATIONS SPECIFIED IN NEC,ART 210.8 (B)(1) – (8) SHALL HAVE GROUND FAULT CIRCUIT INTERRUPTER PROTECTION.

NOTE THAT THE ISOLATED GROUNDING TYPE RECEPTACLES AND CLOCK TYPE RECEPTACLES LOCATED IN THE KITCHEN/SERVING AREA SHALL BE PROTECTED BY GROUND FAULT TYPE CIRCUIT BREAKERS RATHER THAN GROUND FAULT TYPE RECEPTACLES SINCE THESE RECEPTACLES ARE NOT AVAILABLE AS GROUND-FAULT TYPE RECEPTACLES. GFCI BREAKERS REQUIRE A DEDICATED NEUTRAL (NOT SHARED) TO OPERATE PROPERLY.

INTERPLAN PLLC

ARCHITECTURE
ENGINEERING
INTERIOR DESIGN
PROJECT MANAGEMENT

AA 003420
CA 8660

604 COURTLAND STREET
SUITE 100
ORLANDO, FLORIDA 32804
PH 407.645.5008
FX 407.629.9124

SEAL:

THIS DOCUMENT IS NOT FOR REGULATORY APPROVAL, PERMITTING, OR CONSTRUCTION.

NO	DATE	REMARKS

REVISIONS

SHELL BUILDING for DOLLAR TREE

N HWY 19 & CR 44
EUSTIS, FL

PROJECT NO: 2018.0328
DATE: 08-27-2018

E3.0

ELECTRICAL PLAN - POWER

CHECKED: ---- DRAWN: MW

COPYRIGHT © 2018 INTERPLAN PLLC

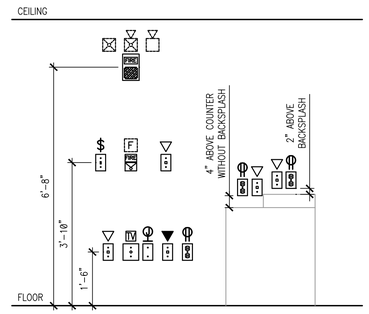

1 TYPICAL MOUNTING HEIGHTS
NTS

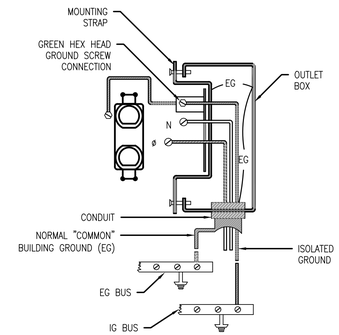

2 ISOLATED GROUND RECEPTACLE
NTS

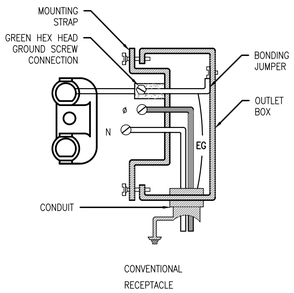

3 CONVENTIONAL RECEPTACLE
NTS

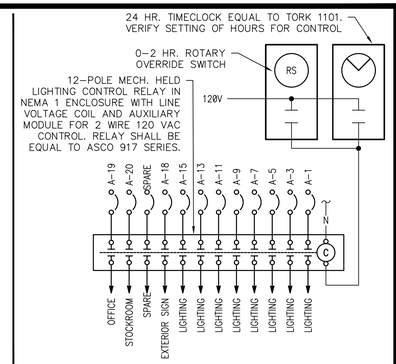

4 DETAIL - INTERIOR LIGHTING CONTROL
NTS

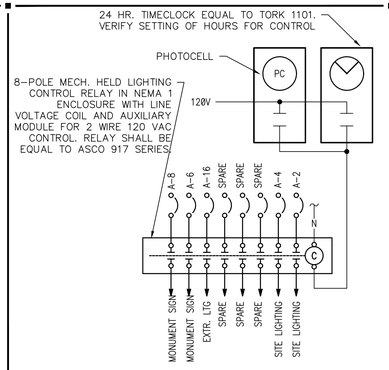

6 DETAIL - EXTERIOR LIGHTING CONTROL
NTS

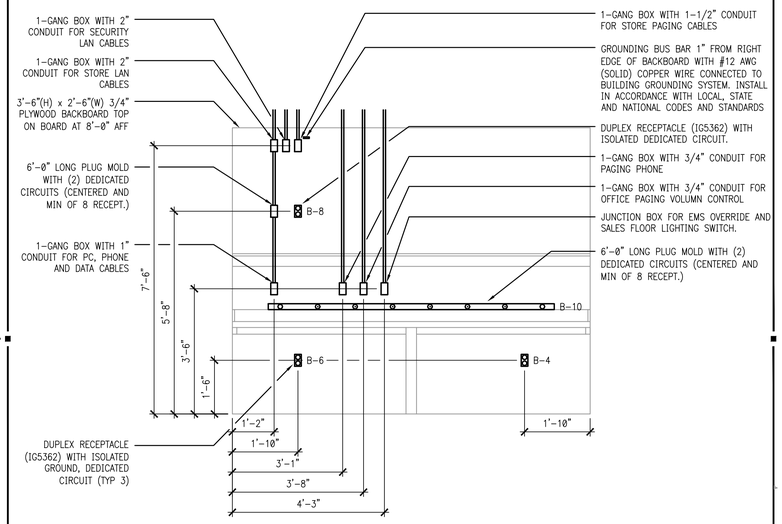

NOTE:

ALL CONDUIT SHALL BE INSTALLED INSIDE WALL TO EXTEND 6" ABOVE SALES FLOOR CEILING. ALL CONDUIT STUBS SHALL BE FINISHED WITH CONNECTOR/BUSHING AND HAVE PULL STRINGS INSTALLED. ALL CONDUIT AND BOXES ARE DIMENSIONED TO CENTERLINE. CONTRACTOR SHALL LABEL TOP OF CONDUIT TO MATCH LABELS ON JACKS/JUNCTIONS BELOW.

NOTE:

CONTRACTOR SHALL LABEL ALL PHONE JACKS/JUNCTIONS AS PER ELEVATION.

5 OFFICE ELEVATION
NTS

NOTE: (PHASE CONDUCTORS NOT SHOWN)

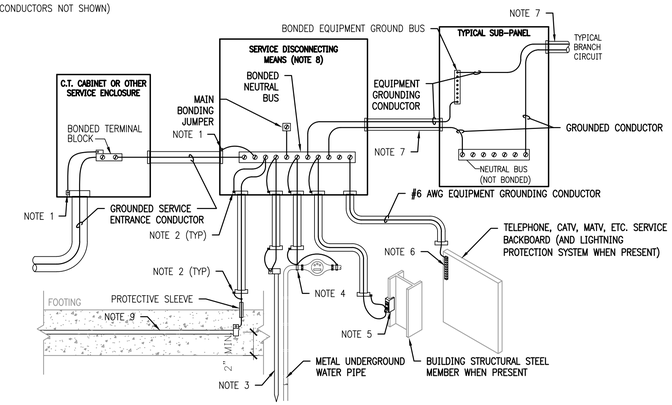

GROUNDING DETAIL NOTES:

1. ALL METAL CONDUITS ENCLOSING ANY SERVICE CONDUCTORS SHALL BE FITTED WITH A "BONDING BUSHING". SIZE THE JUMPER PER NEC.
2. ALL METAL CONDUITS ENCLOSING ANY GROUNDING ELECTRODE CONDUCTOR SHALL BE FITTED WITH A "BONDING BUSHING" AT EACH END. SIZE THE JUMPER PER NEC.
3. PROVIDE AT LEAST ONE SUPPLEMENTAL GROUNDING ELECTRODE PER NEC IN THE FORM OF A 10'-0" x 3/4" COPPER CLAD GROUND ROD INSTALLED PER CURRENT NEC REQUIREMENTS.
4. CONNECT TO THE BUILDING'S METAL UNDERGROUND WATER PIPE WITHIN 5'-0" OF ITS ENTRANCE INTO THE BUILDING AND JUMPER ANY WATER METER PER NEC REQUIREMENTS.
5. IF STRUCTURAL STEEL MEMBER IS AVAILABLE, BOND IT TO THE SERVICE USING A UL LISTED IRREVERSIBLE CLAMP OR WELDED LUG.
6. PROVIDE AN EQUIPMENT GROUND BAR AND ATTACH IT TO THE PHONE BOARD.
7. ALL BRANCH CIRCUIT AND FEEDER CONDUITS ARE TO HAVE AN INSULATED EQUIPMENT GROUNDING CONDUCTOR REGARDLESS OF THE CONDUIT MATERIAL.
8. WHEN THE SERVICE CONSISTS OF MULTIPLE DISCONNECTING MEANS IN SEPARATE ENCLOSURES, CONNECT A TAP CONDUCTOR FROM THE MAIN GROUNDING ELECTRODE CONDUCTOR TO EACH DISCONNECTING MEANS. SIZE THIS TAP BASED ON THE LARGEST SERVICE CONDUCTOR IN THAT SERVICE DISCONNECT ENCLOSURE.
9. PROVIDE A GROUNDING ELECTRODE ENCASED IN AT LEAST 2" OF CONCRETE AND LOCATED NEAR THE BOTTOM OF A CONCRETE FOUNDATION OR FOOTING THAT IS IN DIRECT CONTACT WITH EARTH. GROUNDING ELECTRODE SHALL CONSIST OF AT LEAST 20'-0" OF ONE OR MORE BARE OR ZINC GALVANIZED OR OTHER ELECTRICALLY CONDUCTIVE COATED STEEL REINFORCING BARS OR RODS OF NOT LESS THAN 1/2" IN DIAMETER OR AT LEAST 20'-0" OF #4 AWG BARE COPPER CONDUCTOR.

6 MAIN SERVICE ENTRANCE GROUND CONNECTIONS
N.T.S

INTERPLAN LLC

ARCHITECTURE
ENGINEERING
INTERIOR DESIGN
PROJECT MANAGEMENT

AA 003420
CA 8660

604 COURTLAND STREET
SUITE 100
ORLANDO, FLORIDA 32804
PH 407.645.5008
FX 407.629.9124

SEAL:

THIS DOCUMENT IS NOT FOR REGULATORY APPROVAL, PERMITTING, OR CONSTRUCTION.

NO	DATE	REMARKS

REVISIONS

SHELL BUILDING for DOLLAR TREE

N HWY 19 & CR 44
EUSTIS, FL

PROJECT NO: 2018.0328
DATE: 08-27-2018

E4.0

ELECTRICAL DETAILS

CHECKED: ---- DRAWN: MW

COPYRIGHT © 2018 INTERPLAN LLC

UPDATED: 8/22/2018 2:51 pm
ISSUED FOR: APPROVAL

PANEL MDP

LOCATION: KITCHEN
VOLTAGE: 208Y/120V
TRIM: FLUSH

MAIN: 600A MLO
SYSTEM: 3ø, 4W
BUS RATING 600A

CONN. LOAD: 145.3 KVA
FEED: TOP
GROUND BUS: YES

CKT	LOAD SERVED	COND	PHASE	NEUT	GND	BKR	DMD	L1	L2	L3	DMD	BKR	COND	PHASE	NEUT	GND	LOAD SERVED	CKT
1	PANEL A	SEE RISER DIAGRAM				150/3	SF	6511 3960			SF	100/3	SEE RISER DIAGRAM				PANEL B	2
3	"						SF		5756 6000		SF						"	4
5	"						SF			5741 6280	SF						"	6
7	AHU-1	3/4"	#8	–	#10	35/3	A	4164 3240			A	45/3	3/4"	#8	–	#10	CU-1	8
9	"		#8				A		4164 3240		A			#8			"	10
11	"		#8				A			4164 3240	A			#8			"	12
13	AHU-2	3/4"	#8	–	#10	35/3	A	4164 3240			A	45/3	3/4"	#8	–	#10	CU-2	14
15	"		#8				A		4164 3240		A			#8			"	16
17	"		#8				A			4164 3240	A			#8			"	18
19	AHU-3	3/4"	#8	–	#10	35/3	A	4164 3240			A	45/3	3/4"	#8	–	#10	CU-3	20
21	"		#8				A		4164 3240		A			#8			"	22
23	"		#8				A			4164 3240	A			#8			"	24
25	AHU-4	3/4"	#8	–	#10	35/3	A	4164 3240			A	45/3	3/4"	#8	–	#10	CU-4	26
27	"		#8				A		4164 3240		A			#8			"	28
29	"		#8				A			4164 3240	A			#8			"	30
31	AHU-5	3/4"	#8	–	#10	35/3	A	4164 3240			A	45/3	3/4"	#8	–	#10	CU-5	32
33	"		#8				A		4164 3240		A			#8			"	34
35	"		#8				A			4164 3240	A			#8			"	36
37	SPARE	–	–	–	–	20/3	–	–			–	20/1	–	–	–	–	SPARE	38
39	"		–				–		–		–	20/1	–	–	–	–	SPARE	40
41	"		–				–			–	–	20/1	–	–	–	–	SPARE	42

INTERRUPT RATING: 42,000 AIC | 47491 | 48776 | 49041 | FROM: UTILITY TRANSFORMER

LOADS (IN VA)	CONNECTED	DEMAND FACTOR	MINIMUM FEEDER
LIGHTING	16508	1.25	20635
RECEPTS TO 10 KVA	10000	1.0	10000
RECEPTS REMAINING	2240	0.5	1120
SPACE HEATING	0	0.0	0
AIR CONDITIONING	111060	1.0	111060

LOADS	CONNECTED	DEMAND FACTOR	MINIMUM FEEDER
NON-SEASONAL MOTORS	1000	1.0	1000
LARGEST MOTOR	0	0.25	0
WATER HEATING	3000	1.0	3000
KITCHEN EQUIP.	0	1.0	0

REMAINING CONTINUOUS LOADS	0	1.25	0
REMAINING NON-CONTINUOUS LOADS	1500	1.0	1500
DEMAND LOADS	0	1.0	0
TOTAL CONNECTED LOAD	145.3	KVA	403.6 AMPS
MIN. FEEDER/PANEL CAP.	148.3	KVA	412 AMPS
OVERALL DEMAND FACTOR	1.02		

Note 1. Feeder size: SEE RISER DIAGRAM

UPDATED: 8/6/2018 1:47 pm
ISSUED FOR: APPROVAL

PANEL A

LOCATION: STOCK ROOM
VOLTAGE: 208Y/120V
TRIM: FLUSH

MAIN: 225A MLO
SYSTEM: 3ø, 4W
BUS RATING 225A

CONN. LOAD: 18 KVA
FEED: TOP
GROUND BUS: YES

CKT	LOAD SERVED	COND	PHASE	NEUT	GND	BKR	DMD	L1	L2	L3	DMD	BKR	COND	PHASE	NEUT	GND	LOAD SERVED	CKT
1	SALES AREA LIGHTING	1/2"	#12	#12	#12	20/1	L	770 1152			L	20/1	3/4"	#10	#10	#10	LIGHTING – SITE	2
3	SALES AREA LIGHTING	1/2"	#12	#12	#12	20/1	L		924 1152		L	20/1	3/4"	#10	#10	#10	LIGHTING – SITE	4
5	SALES AREA LIGHTING	1/2"	#12	#12	#12	20/1	L			924 1200	L	20/1	1"	#8	#8	#10	MONUMENT SIGN	6
7	SALES AREA LIGHTING	1/2"	#12	#12	#12	20/1	L	924 1200			L	20/1	1"	#8	#8	#10	MONUMENT SIGN	8
9	SALES AREA LIGHTING	1/2"	#12	#12	#12	20/1	L		924 660		N	20/1	1/2"	#12	#12	#12	INTERIOR TIME CLOCK	10
11	SALES AREA LIGHTING	1/2"	#12	#12	#12	20/1	L			924 660	N	20/1	1/2"	#12	#12	#12	EXTERIOR TIME CLOCK	12
13	SALES AREA LIGHTING	1/2"	#12	#12	#12	20/1	L	924 155			L	20/1	1/2"	#12	#12	#12	RESTROOM/HALLWAY LIGHTING	14
15	SALES AREA LIGHTING	1/2"	#12	#12	#12	20/1	L		924 932		L	20/1	1/2"	#12	#12	#12	LIGHTING–EXTERIOR	16
17	SALES AREA LIGHTING	1/2"	#12	#12	#12	20/1	L			693 1200	L	20/1	3/4"	#12	#12	#12	LIGHTING – BUILDING SIGN	18
19	SALES AREA LIGHTING	1/2"	#12	#12	#12	20/1	L	847 539			L	20/1	1/2"	#12	#12	#12	STOCK ROOM LIGHTING	20
21	SPARE	–	–	–	–	20/1	–		300		N	20/1	1/2"	#12	#12	#12	OFFICE PLUG MOLD	22
23	SPARE	–	–	–	–	20/1	–			– –	–	20/1	–	–	–	–	SPARE	24
25	SPARE	–	–	–	–	20/1	–	– –			–	20/1	–	–	–	–	SPARE	26
27	SPARE	–	–	–	–	20/1	–		– –		–	20/1	–	–	–	–	SPARE	28
29	SPARE	–	–	–	–	20/1	–			– –	–	20/1	–	–	–	–	SPARE	30
31	SPARE	–	–	–	–	20/1	–	– –			–	20/1	–	–	–	–	SPARE	32
33	SPARE	–	–	–	–	20/1	–		– –		–	20/1	–	–	–	–	SPARE	34
35	SPARE	–	–	–	–	20/1	–			– –	–	20/1	–	–	–	–	SPARE	36
37	SPARE	–	–	–	–	20/1	–	– –			–	20/1	–	–	–	–	SPARE	38
39	SPARE	–	–	–	–	20/1	–		– –		–	20/1	–	–	–	–	SPARE	40
41	SPARE	–	–	–	–	20/1	–			– –	–	20/1	–	–	–	–	SPARE	42

INTERRUPT RATING: 42,000 AIC | 6511 | 5756 | 5741 | FROM: PANEL MDP

LOADS (IN VA)	CONNECTED	DEMAND FACTOR	MINIMUM FEEDER
LIGHTING	16508	1.25	20635
RECEPTS TO 10 KVA	0	1.0	0
RECEPTS REMAINING	0	0.5	0
SPACE HEATING	0	0.0	0
AIR CONDITIONING	0	1.0	0

LOADS	CONNECTED	DEMAND FACTOR	MINIMUM FEEDER
NON-SEASONAL MOTORS	0	1.0	0
LARGEST MOTOR	0	0.25	0
WATER HEATING	0	1.0	0
KITCHEN EQUIP.	0	1.0	0

REMAINING CONTINUOUS LOADS	0	1.25	0
REMAINING NON-CONTINUOUS LOADS	1500	1.0	1500
DEMAND LOADS	0	1.0	0
TOTAL CONNECTED LOAD	18	KVA	50 AMPS
MIN. FEEDER/PANEL CAP.	22.1	KVA	61.5 AMPS
OVERALL DEMAND FACTOR	1.23		

Note 1. Feeder size: SEE RISER DIAGRAM

UPDATED: 8/6/2018 1:47 pm
ISSUED FOR: APPROVAL

PANEL B

LOCATION: STOCK ROOM
VOLTAGE: 208Y/120V
TRIM: FLUSH

MAIN: 100A MLO
SYSTEM: 3ø, 4W
BUS RATING 100A

CONN. LOAD: 16.2 KVA
FEED: TOP
GROUND BUS: YES
ISOLATED GROUND BUS: YES

CKT	LOAD SERVED	COND	PHASE	NEUT	GND	BKR	DMD	L1	L2	L3	DMD	BKR	COND	PHASE	NEUT	GND	LOAD SERVED	CKT
1	RECEPTACLES – SALES	1/2"	#12	#12	#12	20/1	R	540 180			R	20/1	1/2"	#12	#12	#12	TELEPHONE BOARD	2
3	RECEPTACLES – SALES	1/2"	#12	#12	#12	20/1	R		540 180		R	20/1	1/2"	#12	#12	#12	RECEPTACLE – OFFICE	4
5	RECEPTACLES – SALES	1/2"	#12	#12	#12	20/1	R			1080 180	R	20/1	1/2"	#12	#12	#12	RECEPTACLE – OFFICE	6
7	RECEPTACLES – SALES	1/2"	#12	#12	#12	20/1	R	540 180			R	20/1	1/2"	#12	#12	#12	RECEPTACLE – OFFICE	8
9	RECEPTACLES – STOCK ROOM	1/2"	#12	#12	#12	20/1	R		1080 180		R	20/1	1/2"	#12	#12	#12	RECEPTACLE – OFFICE	10
11	RECEPTACLES – EXTERIOR GFI	1/2"	#12	#12	#12	20/1	R			180 360	R	20/1	1/2"	#12	#12	#12	RECEPTACLE – EMPLOYEE AREA	12
13	RECEPTACLES – RESTROOM GFI	1/2"	#12	#12	#12	20/1	R	360 360			R	20/1	1/2"	#12	#12	#12	RECEPTACLE – CHECKSTAND	14
15	RECEPTACLES – AHU	1/2"	#12	#12	#12	20/1	R		1080 360		R	20/1	1/2"	#12	#12	#12	RECEPTACLE – CHECKSTAND	16
17	WATER COOLER	1/2"	#12	#12	#12	20/1	K			1000 360	R	20/1	1/2"	#12	#12	#12	RECEPTACLE – CHECKSTAND	18
19	SPARE	–	–	–	–	20/1	–	– 360			R	20/1	1/2"	#12	#12	#12	RECEPTACLE – CHECKSTAND	20
21	SPARE	–	–	–	–	20/1	–		360		R	20/1	1/2"	#12	#12	#12	RECEPTACLE – CHECKSTAND	22
23	RECEPTACLES – SHOW WINDOW	1/2"	#12	#12	#12	20/1	R			1080 360	R	20/1	1/2"	#12	#12	#12	RECEPTACLE – CHECKSTAND	24
25	RECEPTACLES – SHOW WINDOW	1/2"	#12	#12	#12	20/1	R	1080 360			R	20/1	1/2"	#12	#12	#12	RECEPTACLE – CHECKSTAND	26
27	RECEPTACLE – DOORBELL	1/2"	#12	#12	#12	20/1	R		360 360		R	20/1	1/2"	#12	#12	#12	RECEPTACLE – CHECKSTAND	28
29	SPARE	–	–	–	–	20/1	–			– 180	R	20/1	1/2"	#12	#12	#12	RECEPTACLE – SALES AREA CEILING	30
31	SPARE	–	–	–	–	20/1	–	– –			–	20/1	–	–	–	–	SPARE	32
33	SPARE	–	–	–	–	20/1	–		– –		–	20/1	–	–	–	–	SPARE	34
35	SPARE	–	–	–	–	20/1	–			– –	–	20/1	–	–	–	–	SPARE	36
37	SPARE	–	–	–	–	20/1	–	– –			–	20/1	–	–	–	–	SPARE	38
39	SPARE	–	–	–	–	20/1	–		– 1500		W	30/2	1/2"	#10	#10	#10	WATER HEATER	40
41	SPARE	–	–	–	–	20/1	–			– 1500	W			#10			"	42

INTERRUPT RATING: 42,000 AIC | 3960 | 6000 | 6280 | FROM: PANEL MDP

LOADS (IN VA)	CONNECTED	DEMAND FACTOR	MINIMUM FEEDER
LIGHTING	0	1.25	0
RECEPTS TO 10 KVA	10000	1.0	10000
RECEPTS REMAINING	2240	0.5	1120
SPACE HEATING	0	0.0	0
AIR CONDITIONING	0	1.0	0

LOADS	CONNECTED	DEMAND FACTOR	MINIMUM FEEDER
NON-SEASONAL MOTORS	1000	1.0	1000
LARGEST MOTOR	0	0.25	0
WATER HEATING	3000	1.0	3000
KITCHEN EQUIP.	0	1.0	0

REMAINING CONTINUOUS LOADS	0	1.25	0
REMAINING NON-CONTINUOUS LOADS	0	1.0	0
DEMAND LOADS	0	1.0	0
TOTAL CONNECTED LOAD	16.2	KVA	45.1 AMPS
MIN. FEEDER/PANEL CAP.	15.1	KVA	42 AMPS
OVERALL DEMAND FACTOR	0.93		

Note 1. Feeder size: SEE RISER DIAGRAM
Note 2. Provide Isolated Ground conductor(s) for circuit(s) 4, 6, 8, 10, 16, 20, 24, 28

ELECTRICAL CONTRACTOR SHALL OBTAIN APPROVAL FROM UTILITY COMPANY THAT LOAD WILL NOT OVERLOAD UTILITY TRANSFORMER/ UTILITY FEEDERS PRIOR TO ENERGIZING.

208/120V 3 PH, 4 WIRE ELECTRICAL SERVICE

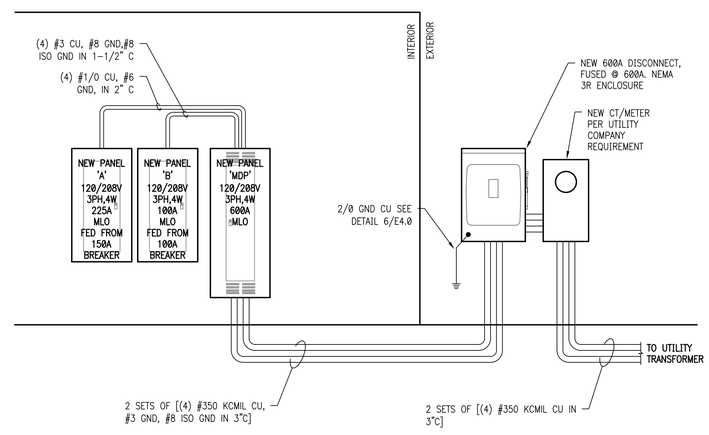

1 ELECTRICAL SERVICE/DISTRIBUTION RISER DIAGRAM
NTS

INTERPLAN LLC
ARCHITECTURE
ENGINEERING
INTERIOR DESIGN
PROJECT MANAGEMENT

AA 003420
CA 8660

604 COURTLAND STREET
SUITE 100
ORLANDO, FLORIDA 32804
PH 407.645.5008
FX 407.629.9124

SEAL:

THIS DOCUMENT IS NOT FOR REGULATORY APPROVAL, PERMITTING, OR CONSTRUCTION.

NO DATE REMARKS
REVISIONS

SHELL BUILDING for DOLLAR TREE

N HWY 19 & CR 44
EUSTIS, FL

PROJECT NO: 2018.0328
DATE: 08-27-2018

E5.0

ELECTREICAL PANEL SCHEDULES AND RISER

CHECKED: ---- DRAWN: MW

COPYRIGHT © 2018 INTERPLAN LLC FILE:S:\PROJECTS\2018\2018.0328 - DOLLAR TREE - EUSTIS, FL - N HWY 19 & CR 44\DRAWINGS\SHELL BLDG\E5 ELECTRICAL PANEL SCHEDULES AND RISER.DWG LAYOUT:E5.0 ELECTRICAL PANEL SCHEDULES AND RISER PLOTTED ON 8/27/2018 2:51:42 PM BY: MARK WEBER